ULTIMATE SERIES JOINTERS

MODELS G9859 / G9860 / G9860ZX / G9861

INSTRUCTION MANUAL

COPYRIGHT © MARCH, 2002 BY GRIZZLY INDUSTRIAL, INC.
WARNING: NO PORTION OF THIS MANUAL MAY BE REPRODUCED IN ANY SHAPE OR FORM WITHOUT THE WRITTEN APPROVAL OF GRIZZLY INDUSTRIAL, INC.
PRINTED IN TAIWAN.

WARNING

Some dust created by power sanding, sawing, grinding, drilling, and other construction activities contains chemicals known to the State of California to cause cancer, birth defects or other reproductive harm. Some examples of these chemicals are:

- Lead from lead-based paints.
- Crystalline silica from bricks, cement, and other masonry products.
- Arsenic and chromium from chemically treated lumber.

Your risk from these exposures varies, depending on how often you do this type of work. To reduce your exposure to these chemicals: work in a well ventilated area, and work with approved safety equipment, such as those dust masks that are specially designed to filter out microscopic particles.

Table Of Contents

PAGE

1. SAFETY
- SAFETY INSTRUCTIONS FOR POWER TOOLS 2-3
- ADDITIONAL SAFETY INSTRUCTIONS FOR JOINTERS 4

2. CIRCUIT REQUIREMENTS
- 220V OPERATION 5
- CIRCUIT LOAD 5
- GROUNDING 6
- EXTENSION CORDS 6

3. INTRODUCTION
- COMMENTARY 7
- COMPARISON CHART AND TERMS 8
- UNPACKING 9
- PIECE INVENTORY 9
- CLEAN UP 10
- SITE CONSIDERATIONS 10

4. ASSEMBLY
- BEGINNING ASSEMBLY 11
- FENCE 11-12
- CUTTERHEAD 12
- PEDESTAL SWITCH 13

5. ADJUSTMENTS
- GENERAL 14
- KNIVES 14-15
- SPIRAL CUTTERHEAD 16
- OUTFEED TABLE 16
- INFEED TABLE 17
- 90˚ FENCE STOP 17
- 45˚ FENCE STOP 18

6. OPERATIONS
- TEST RUN 19
- STOCK INSPECTION 19
- EDGE JOINTING 20
- BEVELING 20
- SURFACE PLANING 21

7. MAINTENANCE
- GENERAL 22
- TABLES 22
- LUBRICATION 22
- V-BELT 22

8. CLOSURE 23

TROUBLESHOOTING GUIDE 24
MACHINE DATA, PARTS BREAKDOWN AND PARTS LISTS 25-48
WARRANTY AND RETURNS 50-52

SECTION 1: SAFETY

⚠WARNING

For Your Own Safety Read Instruction Manual Before Operating This Equipment

The purpose of safety symbols is to attract your attention to possible hazardous conditions. This manual uses a series of symbols and signal words which are intended to convey the level of importance of the safety messages. The progression of symbols is described below. Remember that safety messages by themselves do not eliminate danger and are not a substitute for proper accident prevention measures.

⚠DANGER	**Indicates an imminently hazardous situation which, if not avoided, WILL result in death or serious injury.**
⚠WARNING	**Indicates a potentially hazardous situation which, if not avoided, COULD result in death or serious injury.**
⚠CAUTION	**Indicates a potentially hazardous situation which, if not avoided, MAY result in minor or moderate injury. It may also be used to alert against unsafe practices.**
NOTICE	**This symbol is used to alert the user to useful information about proper operation of the equipment.**

⚠WARNING

Safety Instructions For Power Tools

1. **KEEP GUARDS IN PLACE** and in working order.
2. **REMOVE ADJUSTING KEYS AND WRENCHES.** Form habit of checking to see that keys and adjusting wrenches are removed from tool before turning on.
3. **KEEP WORK AREA CLEAN.** Cluttered areas and benches invite accidents.
4. **DO NOT USE IN DANGEROUS ENVIRONMENT.** Do not use power tools in damp or wet locations, or where any flammable or noxious fumes may exist. Keep work area well lighted.
5. **KEEP CHILDREN AND VISITORS AWAY.** All children and visitors should be kept a safe distance from work area.
6. **MAKE WORKSHOP CHILD PROOF** with padlocks, master switches, or by removing starter keys.
7. **DO NOT FORCE TOOL.** It will do the job better and safer at the rate for which it was designed.
8. **USE RIGHT TOOL.** Do not force tool or attachment to do a job for which it was not designed.

⚠WARNING

Safety Instructions For Power Tools

9. **USE PROPER EXTENSION CORD**. Make sure your extension cord is in good condition. Conductor size should be in accordance with the chart below. The amperage rating should be listed on the motor or tool nameplate. An undersized cord will cause a drop in line voltage resulting in loss of power and overheating. Your extension cord must also contain a ground wire and plug pin. Always repair or replace extension cords if they become damaged.

Minimum Gauge for Extension Cords

	LENGTH		
AMP RATING	**25ft**	**50ft**	**100ft**
0-6	18	16	16
7-10	18	16	14
11-12	16	16	14
13-16	14	12	12
17-20	12	12	10
21-30	10	10	No

10. **WEAR PROPER APPAREL.** Do not wear loose clothing, gloves, neckties, rings, bracelets, or other jewelry which may get caught in moving parts. Non-slip footwear is recommended. Wear protective hair covering to contain long hair.

11. **ALWAYS USE SAFETY GLASSES.** Also use face or dust mask if cutting operation is dusty. Everyday eyeglasses only have impact resistant lenses, they are NOT safety glasses.

12. **SECURE WORK.** Use clamps or a vise to hold work when practical. It's safer than using your hand and frees both hands to operate tool.

13. **DO NOT OVERREACH.** Keep proper footing and balance at all times.

14. **MAINTAIN TOOLS WITH CARE.** Keep tools sharp and clean for best and safest performance. Follow instructions for lubricating and changing accessories.

15. **USE RECOMMENDED ACCESSORIES.** Consult the owner's manual for recommended accessories. The use of improper accessories may cause risk of injury.

16. **REDUCE THE RISK OF UNINTENTIONAL STARTING.** On machines with magnetic contact starting switches there is a risk of starting if the machine is bumped or jarred. Always disconnect from power source before adjusting or servicing. Make sure switch is in OFF position before reconnecting.

17. **MANY WOODWORKING TOOLS CAN "KICKBACK" THE WORKPIECE** toward the operator if not handled properly. If you do not understand what kickback is, or how to prevent it, **Do Not** operate this machine.

18. **CHECK DAMAGED PARTS.** Before further use of the tool, a guard or other part that is damaged should be carefully checked to determine that it will operate properly and perform its intended function. Check for alignment of moving parts, binding of moving parts, breakage of parts, mounting, and any other conditions that may affect its operation. A guard or other part that is damaged should be properly repaired or replaced.

19. **NEVER LEAVE TOOL RUNNING UNATTENDED. TURN POWER OFF.** Do not leave tool until it comes to a complete stop.

20. **NEVER OPERATE A MACHINE WHEN TIRED, OR UNDER THE INFLUENCE OF DRUGS OR ALCOHOL.** Full mental alertness is required at all times when running a machine.

21. **NEVER ALLOW UNSUPERVISED OR INEXPERIENCED PERSONNEL TO OPERATE THE MACHINE.** Make sure any instructions you give in regards to machine operation are approved, correct, safe, and clearly understood.

22. **IF AT ANY TIME YOU ARE EXPERIENCING DIFFICULTIES** performing the intended operation, stop using the machine! Then contact our service department or ask a qualified expert how the operation should be performed.

⚠WARNING

Additional Safety Instructions For Jointers

1. **JOINTING SAFETY BEGINS** with your lumber. Inspect your stock carefully before you feed it over the cutterhead. If you have any doubts about the stability or structural integrity of your stock, **DO NOT JOINT IT!**

2. **MAINTAIN PROPER RELATIONSHIPS** of infeed and outfeed table surfaces and cutterhead knife path.

3. **ALWAYS USE A PUSH BLOCK** when jointing. Never place your hands directly over the cutterhead.

4. **SUPPORT THE WORKPIECE** adequately at all times during operation, and maintain control over the work at all times.

5. **WHEN JOINTING**, do not stand directly at the end of either table. Position yourself just to the side of the infeed table to protect yourself from possible kickbacks**.**

6. **NEVER MAKE JOINTING CUTS** deeper than ⅛".

7. **NEVER JOINT A BOARD** that has loose knots. All defects should be cut out of the board before it is planed or jointed.

8. **NEVER JOINT** end grain.

9. **JOINT WITH THE GRAIN**. Jointing against the grain is dangerous and could produce chatter or excessive chip out, which could lead to loss of control over the workpiece.

10. **WITH THE EXCEPTION OF RABBETING**, all operations must be performed with the guard in place. After rabbeting, be sure to replace the guard.

11. **NEVER BACK THE WORK** toward the infeed table. If a cut must be interrupted, lift the workpiece clear of the cutterhead.

12. **HABITS – GOOD AND BAD** – are hard to break. Develop good habits in your shop and safety will become second-nature to you.

13. **"KICKBACK"** is when the workpiece is thrown off the jointer table by the force of the cutterheads. Always use pushblocks and safety glasses to reduce the likelihood of injury from "kickback." If you do not understand what kickback is, or how it occurs, **Do Not** operate this machine.

14. **BE AWARE THAT CERTAIN WOODS MAY CAUSE AN ALLERGIC REACTION** in people and animals, especially when exposed to fine dust. Make sure you know what type of wood dust you will be exposed to and always wear an approved respirator.

⚠CAUTION

No list of safety guidelines can be complete. Every shop environment is different. Always consider safety first, as it applies to your individual working conditions. Use this and other machinery with caution and respect. Failure to do so could result in serious personal injury, damage to equipment or poor work results.

SECTION 2: CIRCUIT REQUIREMENTS

220V Operation

The Ultimate Series Jointers have a 3 H.P., 3450 R.P.M. motor which requires a 220V single-phase circuit. The cord set enclosed does not have a plug as the style of plug you require will depend upon the type of service you currently have or plan to install. The motor will safely draw about 15 amps at 220V under load. If you operate the Ultimate Series Jointers on any circuit that is already close to its capacity, it might blow a fuse or trip a circuit breaker. However, if an unusual load does not exist, and power failure still occurs, have the circuit inspected by a qualified electrician.

Circuit Load

When operating at 220V, we recommend using a NEMA-style 6-15 plug and outlet. **See Figure 1**. You may also “hard-wire” the machine directly to your panel, provided you place a disconnect switch near the machine. Check the electrical codes in your area for specifics on wiring requirements.

Under normal use, the motor draws approximately 15 amps at 220V. We recommend a 15 amp circuit breaker for 220V operation. This should be satisfactory for normal use while providing enough protection against circuit damage caused by power surges. Always check to see if your current wires are capable of handling a 15 amp load. If you are unsure, consult the advice of a qualified electrician.

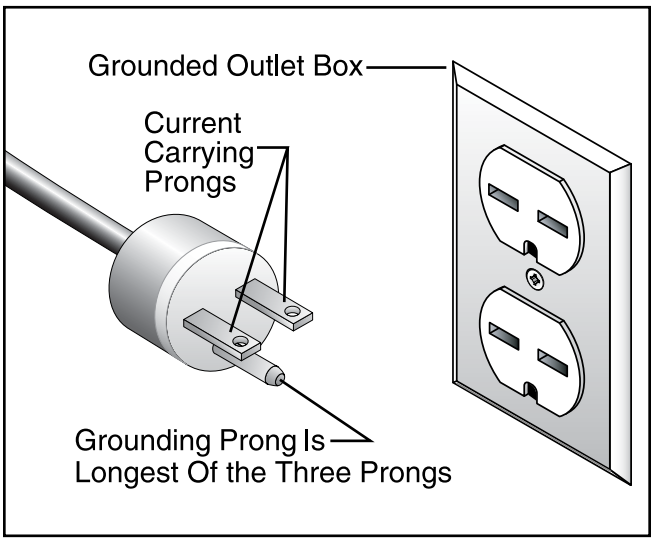

Figure 1. Typical 220V 3-prong plug and outlet.

Grounding

In the event of an electrical short, grounding provides electric current a path of least resistance to reduce the risk of electrical shock. This tool is equipped with an electric cord having an equipment-grounding conductor which must be properly connected to a grounding plug. The plug must be plugged into a matching outlet that is properly installed and grounded in accordance with all local codes and ordinances.

Improper connections of the electrical-grounding conductor can result in risk of electric shock. The conductor with green or green and yellow striped insulation is the electrical-grounding conductor. If repair or replacement of the electric cord or plug is necessary, do not connect the equipment grounding conductor to a live terminal.

WARNING

This equipment must be grounded. Verify that any existing electrical outlet and circuit you intend to plug into is actually grounded. Under no circumstances should the grounding pin from any three-pronged plug be removed. Serious injury may occur.

Extension Cords

We do not recommend the use of extension cords with 220V equipment. It is much better to arrange the placement of your equipment and the installed wiring to eliminate the need for extension cords. Should it be necessary to use an extension make sure the cord is rated Hard Service (grade S) or better. Refer to the chart in **Section 1: Safety Instructions** to determine the minimum gauge for the extension cord. The extension cord must also contain a ground wire and plug pin. Always repair or replace extension cords when they become worn or damaged.

CAUTION

We have covered some basic electrical requirements for the safe operation of your machine. These requirements are not necessarily comprehensive. You must be sure that your particular electrical configuration complies with local and state codes. Ensure compliance by checking with your local municipality or a licensed electrician.

SECTION 3: INTRODUCTION

Commentary

We are proud to offer the Ultimate Series Jointers. These machines are part of a growing Grizzly family of fine woodworking machinery. When used according to the guidelines set forth in this manual, you can expect years of trouble-free, enjoyable operation and proof of Grizzly's commitment to customer satisfaction.

The Ultimate Series Jointers all feature 3 H.P. TEFC motors. The cutterhead knives are laminated high speed steel, resharpenable, and are adjusted by means of jack screws, making blade setting quick and easy. Spiral cutterhead models feature indexed solid carbide cutters that can be rotated through 4 different cutting surfaces before needing to be changed. The infeed and outfeed tables are precision ground cast iron and adjustable by means of handwheels. The operator controls are conveniently mounted on a pedestal above the tables. The Ultimate Series Jointers incorporate cast iron stands and a dust chute for easy connection to a dust collection system.

We are also pleased to provide this universal manual covering all of the Ultimate Series Jointers. It was written to guide you through assembly, review safety considerations, and cover general operating procedures. It represents our effort to produce the best documentation possible. If you have any comments regarding this manual, please write to us at the address below:

Grizzly Industrial, Inc.
C/O Technical Documentation
P.O. Box 2069
Bellingham, WA 98227-2069

Most importantly, we stand behind our machines. If you have any service questions or parts requests, please call or write us at the location listed below.

Grizzly Industrial, Inc.
1203 Lycoming Mall Circle
Muncy, PA 17756
Phone: (570) 546-9663
Fax: (800) 438-5901
E-Mail: techsupport@grizzly.com
Web Site: http://www.grizzly.com

The specifications, drawings, and photographs illustrated in this manual represent the Ultimate Series Jointers as supplied when the manual was prepared. However, owing to Grizzly's policy of continuous improvement, changes may be made at any time with no obligation on the part of Grizzly. Whenever possible, though, we send manual updates to all owners of a particular tool or machine. Should you receive one, we urge you to insert the new information with the old and keep it for reference.

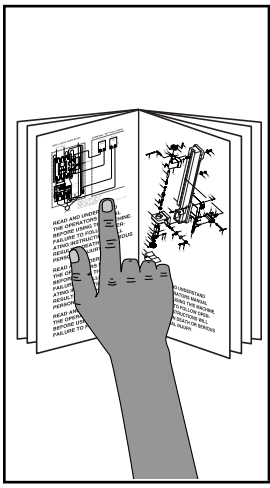

⚠WARNING

Read the manual before assembly and operation. Become familiar with the machine and its operation before beginning any work. Serious personal injury may result if safety or operational information is not understood or followed.

Ultimate Series Jointers

Description	G9859	G9860	G9860ZX	G9861
Table Size	8 ½" x 73 ⅜"	12 ½" x 80"	12 ½" x 80"	14 ¼" x 79 ¾"
Cutterhead Speed	5900 R.P.M.	5900 R.P.M.	5900 R.P.M.	5900 R.P.M.
Cutterhead	4" Dia., 3 Knife	4" Dia., 3 Knife	Spiral Cutterhead	4" Dia., 3 Knife
Motor	3 H.P./1 PH.	3 H.P./1 PH.	3 H.P./1 PH.	3 H.P./1 PH.
Fence Size	4 ¾" x 39 ¼"	4 ¾" x 39 ¼"	4 ¾" x 39 ¼"	4 ¾" x 39 ⅜"
Weight	900 lbs.	1080 lbs.	1080 lbs.	1210 lbs.

Terms and Definitions

Infeed Table: The infeed table is the table where the cutting operation begins. When facing the front of the jointer, it is on the right hand side. The wood travels right to left; from the infeed table, across the cutterhead, and onto the outfeed table.

Outfeed Table: The outfeed table is the table where the cutting operation ends. When facing the front of the jointer, it is on the left hand side.

Cutterhead: The cutterhead is the cylindrical assembly that holds each of the three jointer knives. It spins on a horizontal axis between the infeed and outfeed table, and is covered by the cutterhead guard when the jointer is not in use.

Fence: The jointer fence is the adjustable cast iron surface that the wood stock runs along when jointing and surface planing. The fence is adjustable from 45° to 90° to the infeed and outfeed tables.

Adjustment Handwheels: Controls the height of the infeed and outfeed tables.

Table Lock Handles: The threaded handles that must be loosened before the height of the tables can be adjusted. They are then tightened after the height is properly set.

Rabbet Cut: A rabbet cut is a groove cut along the long edge of the wood stock. This cut is typically used in carcass construction. The cutterhead guard must be removed for this operation so great care is needed for safe operation.

Surface Planing: Surface planing is running the face of the wood stock over the jointer. This provides one flat side that is ready to be run through a dedicated planing machine.

Edge Jointing: Edge jointing is running the long edge of the wood stock over the jointer. This provides one flat edge that is ready to be run against the table saw rip fence or ready to be edge glued.

Cutterhead Guard: The metal guard that covers the cutterhead when wood stock is not passing over the jointer.

Unpacking

The Ultimate Series Jointers are shipped from the manufacturer in a carefully packed carton. If you discover the machine is damaged after you've signed for delivery, immediately call Customer Service for advice.

When you are completely satisfied with the condition of your shipment, you should inventory its parts.

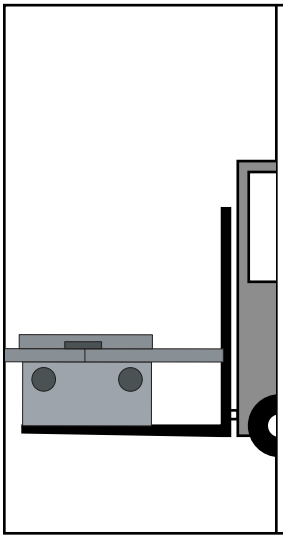

WARNING

The Ultimate Series Jointers are heavy machines. DO NOT over-exert yourself while unpacking or moving your machine – you will need assistance and power equipment. Serious personal injury may occur if safe moving methods are not followed.

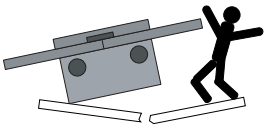

WARNING

Make sure floor structure is capable of supporting the combined weight of the machine parts and people.

NOTICE

A full parts list and breakdown can be found toward the end of this manual. For easier assembly, or to identify specific parts, please refer to the detailed illustrations at the end of the manual.

Piece Inventory

Ultimate Series Jointers consist of:

- Jointer Assembly (Not Shown)
- Fence Assembly
- Cutterhead Guard
- Push Blocks (2)
- Fence Base Support
- Tool Bag
  - 8, 6, 5, 4, 3mm Allen® Wrenches
  - 11/13mm Open End Wrench
  - Knife Setting Gauge

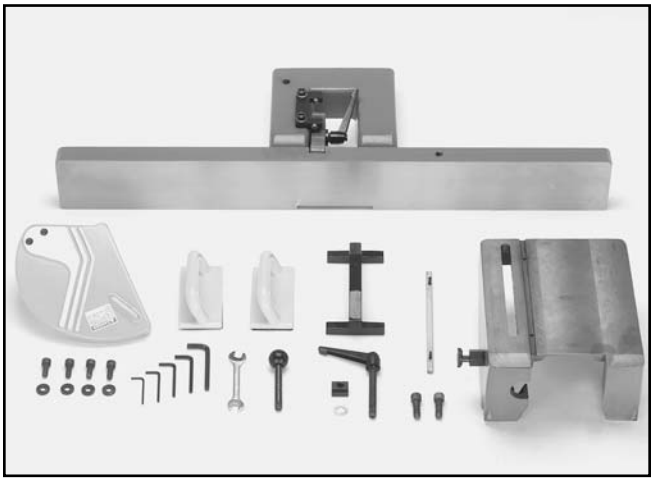

Figure 2. Ultimate Series Jointer layout.

Clean Up

The unpainted surfaces are coated with a waxy oil to protect it from corrosion during shipment. Remove this protective coating with a solvent cleaner or citrus-based degreaser such as Grizzly's G7895 Degreaser. Avoid chlorine-based solvents as they may damage painted surfaces should they come in contact. Always follow the usage instructions on the product you choose for clean up.

WARNING

Do not use gasoline or other petroleum-based solvents. They have low flash points which make them extremely flammable. A risk of explosion and burning exists if these products are used. Serious personal injury may occur if this warning is ignored.

WARNING

Do not smoke while using solvents. A risk of explosion or fire exists and may result in serious personal injury.

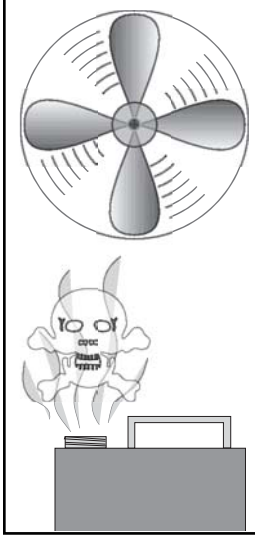

CAUTION

Many of the solvents commonly used to clean machinery can be toxic when inhaled or ingested. Always work in well-ventilated areas far from potential ignition sources when dealing with solvents. Use care when disposing of waste rags and towels to be sure they do not create fire or environmental hazards.

Site Considerations

FLOOR LOAD

Your Ultimate Series Jointer represents a large weight load in a medium footprint. Most commercial or home shop floors should be sufficient to carry the weight. If you question the strength of your floor, you may wish to check with an architect or structural engineer in your area to make certain it can handle the load.

WORKING CLEARANCES

Working clearances can be thought of as the distances between machines and obstacles that allow safe operation of every machine without limitation. Consider existing and anticipated machine needs, size of material to be processed through each machine, and space for auxiliary stands and/or work tables. Also consider the relative position of each machine to one another for efficient material handling. Be sure to allow yourself sufficient room to safely run your machines in any foreseeable operation.

LIGHTING AND OUTLETS

Lighting should be bright enough to eliminate shadow and prevent eye strain. Electrical circuits should be dedicated or large enough to handle combined motor amp loads. Outlets should be located near each machine so power or extension cords are not obstructing high-traffic areas. Be sure to observe local electrical codes for proper installation of new lighting, outlets, or circuits.

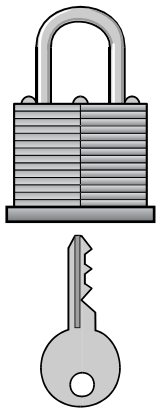

CAUTION

Make your shop "child safe." Ensure that your workplace is inaccessible to youngsters by closing and locking all entrances when you are away. Never allow visitors in your shop when assembling, adjusting or operating equipment.

SECTION 4: ASSEMBLY

Beginning Assembly

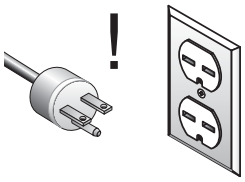

WARNING

Disconnect power to the machine when performing any maintenance, assembly or adjustments. Failure to do this may result in serious personal injury.

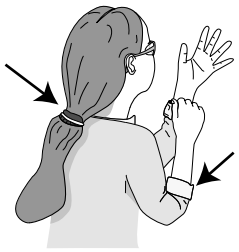

WARNING

Keep loose clothing rolled up and out of the way of machinery and keep hair pulled back.

WARNING

Wear safety glasses during the entire assembly process. Failure to comply may result in serious personal injury.

CAUTION

Some metal parts may have sharp edges on them after they are formed. Please examine the edges of all metal parts before handling them. Failure to do so could result in injury.

Most of your Ultimate Series Jointer has been assembled at the factory, but some parts must be assembled or installed after delivery. We have organized the assembly process into steps. Please follow along in the order presented here.

TOOLS REQUIRED: You will need a high quality square, 45° angle gauge, a long straightedge, 11/13mm open end wrench, and a 8, 6, 5, 4 and 3mm Allen® wrench.

Fence

NOTICE

DO NOT slide the fence across the outfeed table. Scratching will result.

To install the fence assembly:

1. Using (2) M12-1.75 x 35 cap screws, (2) M12 washers, and (2) ⅝" I.D. x 3mm thick x 38mm O.D. special washers, attach the fence base support to the jointer assembly as shown in **Figure 3**. Make sure the special washers are between the fence base support and the jointer assembly. The 2 washers go between the cap screw head and the jointer assembly. Tighten securely.

2. Make sure the 10 x 8 x 260mm key is fitted into the key way on the fence base support as shown in **Figure 4**.

CAUTION

The fence assembly is a heavy part. Seek assistance when lifting it onto the fence base support.

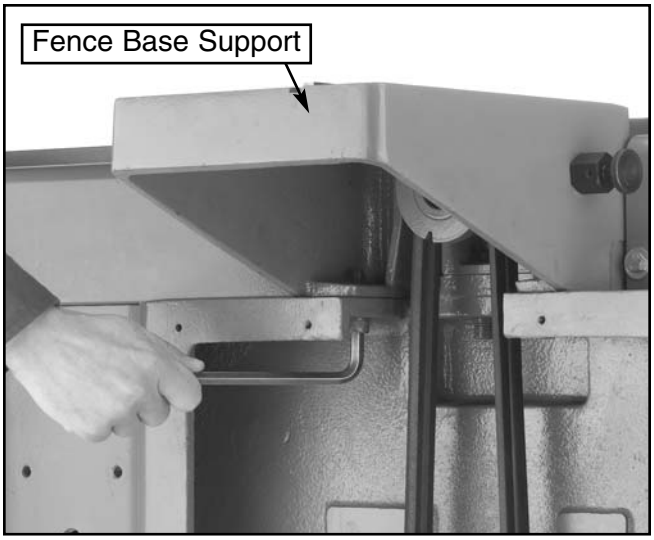

Figure 3. Attach fence base support to jointer assembly.

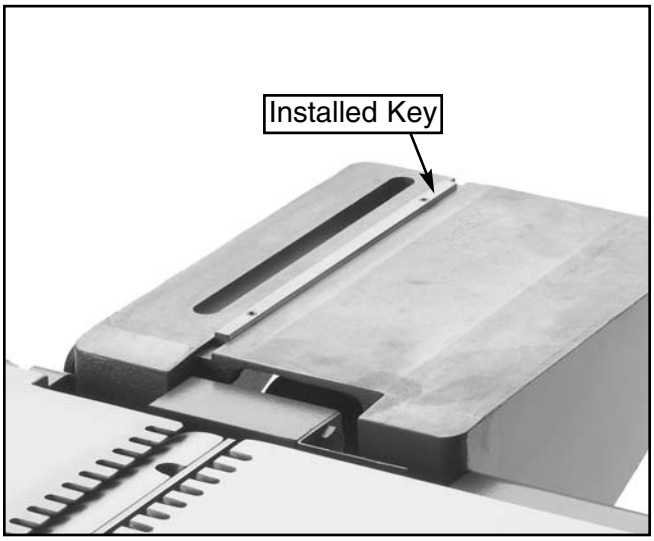

Figure 4. Properly installed key.

3. Carefully lift the fence assembly onto the fence base support. Make sure that the key is fully seated into the key way. Avoid letting the fence slide across the jointer tables.

4. Slide the lock handle shaft through the flat washer and into the slot on the top of the fence assembly base. Thread the slide piece onto the end of the lock knob shaft as shown in **Figure 5**.

5. Thread the fence adjustment handle into the tapped hole on the top edge of the fence.

6. With the lock knob loose, the fence assembly should slide smoothly across the key way. Avoid letting the fence drag across the tables.

Figure 5. Fence base lock knob attachment.

Cutterhead Guard

The cutterhead guard spring tension comes preset from the factory. To install the cutterhead guard:

1. Loosen the black plastic knob shown in **Figure 6**.

2. Slide the cutterhead assembly post into the slot shown in **Figure 6**.

3. Tighten the black plastic knob that was loosened in **Step 1**.

4. When rotated, make sure the cutterhead guard rotates back over the cutterhead assembly.

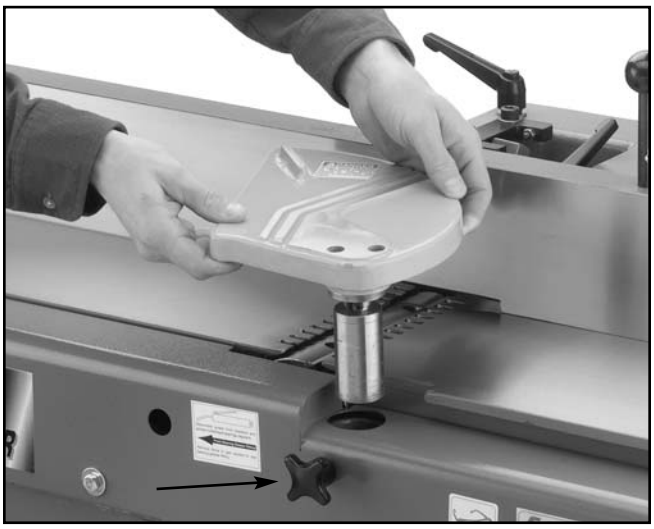

Figure 6a. Attaching cutterhead guard.

Pedestal Switch

Your jointer comes with a pedestal mounted magnetic switch for safety and convenience. Simply bolt the pedestal to the four mounting holes on the back side of the stand with (4) M10-1.5 x 25 cap screws and (4) M10 flat washers as shown in **Figure 7A & 7B.**

Figure 7A. Mounting the pedestal switch.

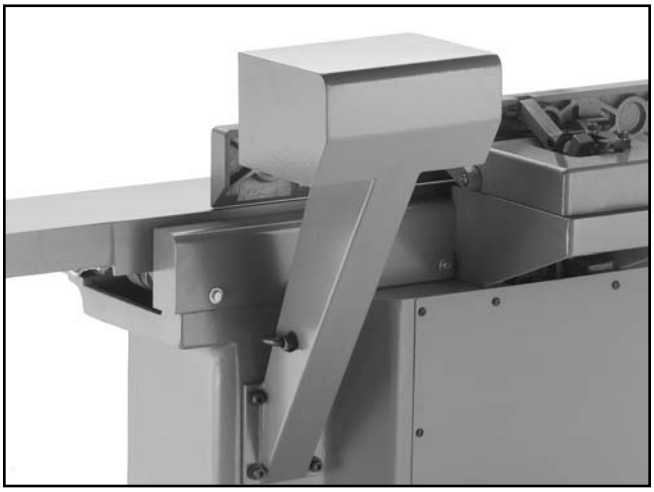

Figure 7B. Mounted pedestal switch.

SECTION 5: ADJUSTMENTS

General

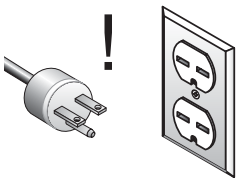

WARNING

Disconnect power to the machine when performing any maintenance, assembly or adjustments. Failure to do this may result in serious personal injury.

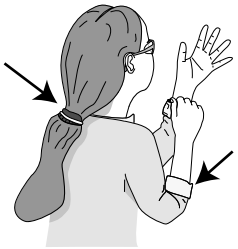

WARNING

Keep loose clothing rolled up and out of the way of machinery and keep hair pulled back.

WARNING

Wear safety glasses during the entire adjustment process. Failure to comply may result in serious personal injury.

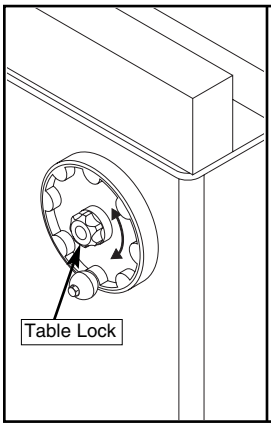

WARNING

Always lock the table with the table lock before using the jointer. If this step is not observed, the table could slide down while the jointer is operating. Serious personal injury may occur.

Knives

NOTICE

The Model G9953 is supplied with a 4 knife cutterhead, while the Models G9859/60/61 have 3 knife cutterheads.

WARNING

Jointer knives are extremely sharp. Never grab the cutterhead directly to rotate it. Always use the drive pulley. Always be sure the jointer is disconnected from its power source before you make any adjustments. Serious personal injury may occur.

Note: The Model G9860ZX has a spiral cutterhead in place of the knife cutterhead. Adjustment will be discussed in the next section.

The knives of your jointer must be periodically replaced or adjusted. Adjustments should be as precise as possible with tolerances within .002"-.003" to prolong the sharpness of the knife edges. Improperly adjusted knives can unbalance the cutterhead and shorten bearing life, as well as produce substandard jointing or planing results.

1. **Unplug the jointer!** Remove the cutterhead guard to expose the top of the cutterhead.

2. Carefully turn the cutterhead (using the pulley) until the first knife is at top dead center. Engage the brake rod to secure the cutterhead into a stationary position as shown in **Figure 8**.

3. Using the knife setting gauge, check the knife height. The jig should sit solidly with the feet resting on the outfeed table and the knife edge as shown in **Figure 9.** If the knife is adjusted properly, the knife setting gauge should rest flush across the outfeed table and onto the top edge of the knife. If the knife does not make contact, or if the knife causes the adjusters legs to not seat flush on the outfeed table, the knives need to be adjusted.

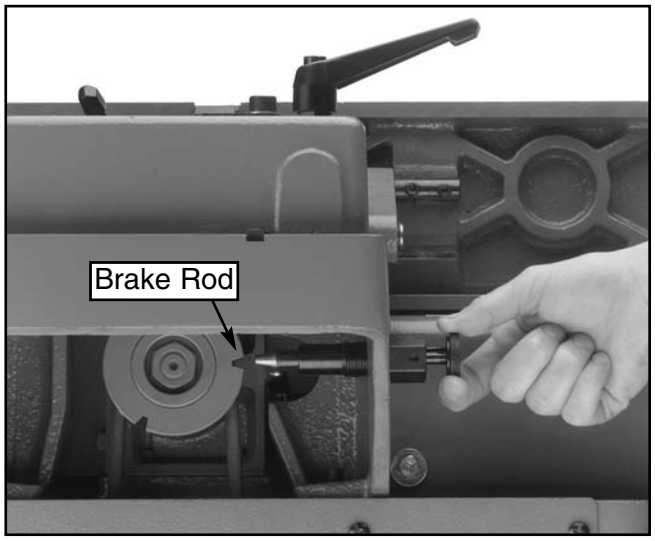

Figure 8. Engaging the brake rod.

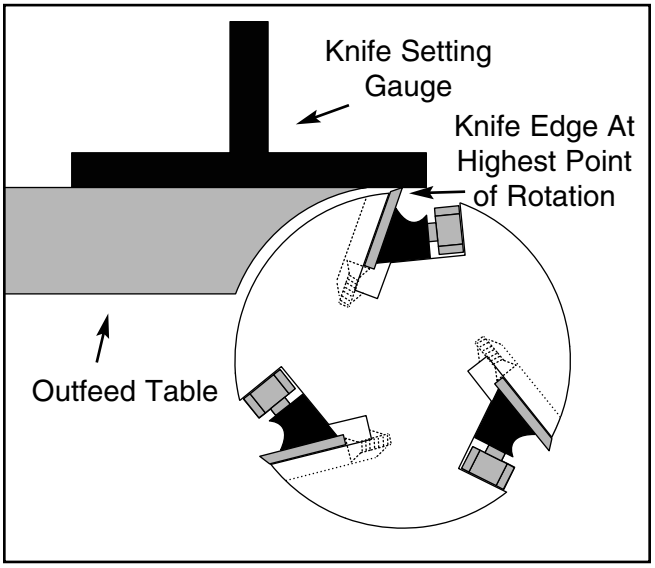

Figure 9 shows the setting of the knives with the knife setting gauge.

The knives are locked into the cutterhead with wedge-type gibs and gib bolts. Jack screws under the knives allow fine tuning to help in the setting process. To re-align the knives:

1. **Unplug the jointer!**

2. Loosen the gib bolts until the knife is loose in the slot. The gib bolts turn clockwise to loosen and counterclockwise to tighten (when facing the head of the bolt). **See Figures 10 and 11.**

3. Place the knife setting gauge across the knife edge and the outfeed table as described previously.

4. Adjust the screws below each end of the knife until both feet of the gauge rest flush and evenly on the outfeed table and the knife edge is just touching the bottom of the gauge. Securely tighten each gib bolt. The gauge will set the knives at a uniform protrusion above the cutterhead. The knife height should vary no more than .002"-.003" across the length of the cutterhead. A dial indicator can be used to check variation in thousandths of an inch; however, the standard knife setting gauge is satisfactory for reasonably accurate knife setting tasks.

5. Repeat the same procedure on the remaining knives.

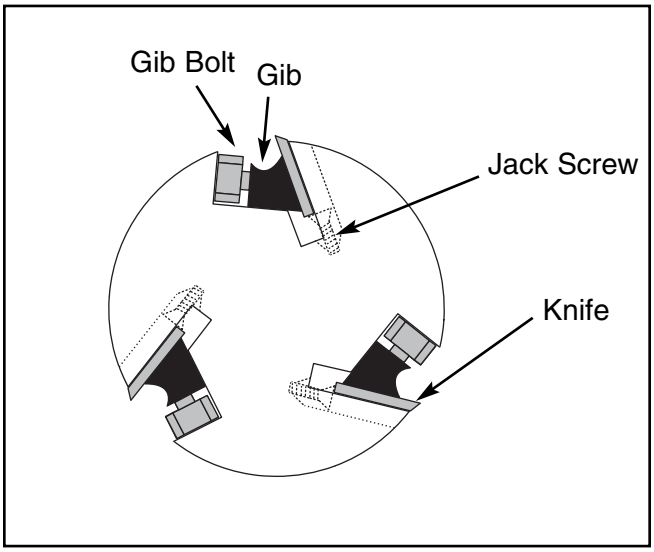

Figure 10. Parts of the cutterhead.

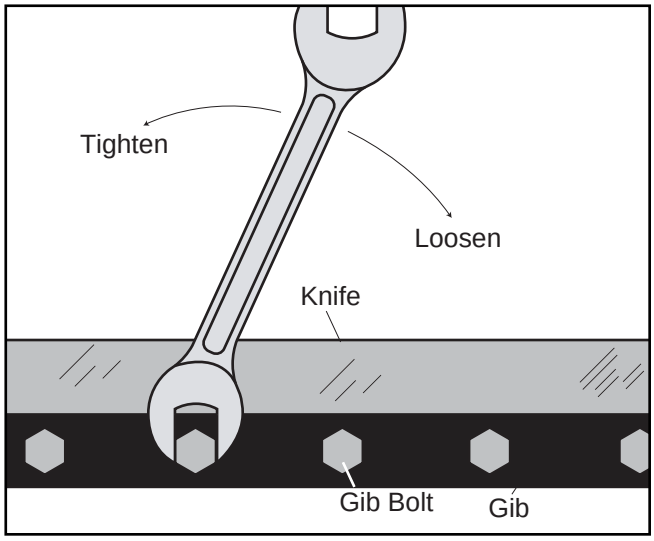

Figure 11. Tightening the gib bolts.

Spiral Cutterhead

The Model G9860ZX is equipped with a spiral cutterhead. The indexed square carbide cutters have four separate cutting surfaces that can be rotated as needed. If one of the cutters becomes damaged or dull, rotate the cutter to reveal the fresh cutting surface. Each edge of the indexed cutter is marked for easy identification. When an indexed cutter needs to be replaced, please order part #H2334 from the current Grizzly catalog.

Outfeed Table

Facing the fence, the outfeed table is located to the left of the cutterhead. The outfeed table must be aligned to the highest point of the arc of the knife edges. If the outfeed table is set too high, the board will hit the front edge of the outfeed table and will be impossible to feed over the jointer. If the outfeed table is set too low, the trailing end of the board will fall into the cutterhead and snipe will occur.

1. Rotate the cutterhead by turning the motor pulley. **DO NOT** grab the cutterhead itself. Bring a knife edge to the approximate apex of its arc. Engage the brake rod to securely position the cutterhead.

2. Loosen the outfeed table lock knob located on the center of the outfeed table handwheel. Rotate the outfeed table handwheel until the outfeed table is nearly flush with the knife edge.

3. Position a steel straightedge on the outfeed table. Extend the straightedge over the middle of the cutterhead as shown in **Figure 12**.

2. Loosen the outfeed table lock knob located on the center of the outfeed table handwheel. Rotate the outfeed table handwheel until the outfeed table is nearly flush with the knife edge.

3. Position a steel straightedge on the outfeed table. Extend the straightedge over the middle of the cutterhead as shown in **Figure 12**.

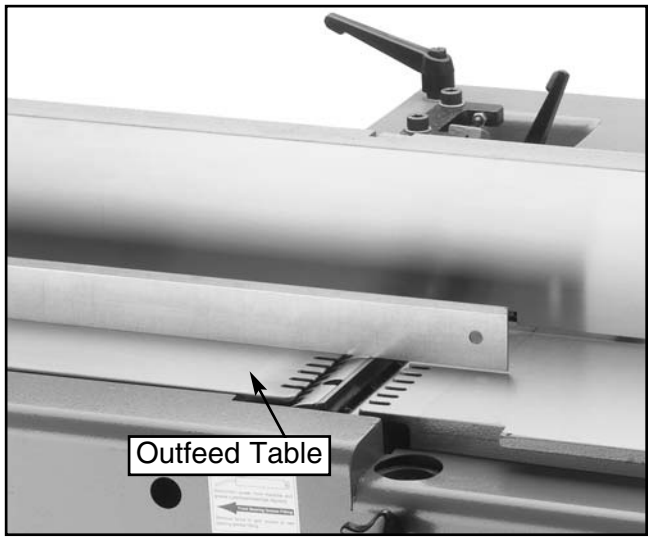

Figure 12. Setting outfeed table with straightedge.

4. Raise or lower the outfeed table with the outfeed table handwheel until the straightedge barely touches the knife edge. Rock the cutterhead to ensure that the blade edge is at the highest point of its arc. Check the other two blades in the same manner. If they do not all touch the straightedge evenly, they are not at the same height. You must reset the knives. Be sure to test the height at both ends of the cutter knives. The knives must be parallel to the table surface.

5. Tighten the outfeed table lock knob.

6. Recheck the outfeed table alignment with each of the cutterhead knives and re-adjust as necessary.

7. Once properly set, the outfeed table height will only need to be changed when the knives are resharpened.

Infeed Table

To adjust the infeed table:

1. The infeed table can be adjusted the same way as the outfeed table. Loosen the infeed table lock knob in the center of the handwheel.

2. Place a straightedge on the outfeed table so it hangs over the infeed table. Turn the cutterhead so that the knives are **NOT** touching the straightedge.

3. Loosen the infeed table lock knob. Raise the infeed table until it just touches the straightedge as shown in **Figure 13**. Tighten the table lock knob.

4. Adjust the depth of cut scale to read “0”.

Figure 13. Setting the depth of cut scale.

90° Fence Stop

1. Place a square on the outfeed table fairly close to the cutterhead as shown in **Figure 14**.

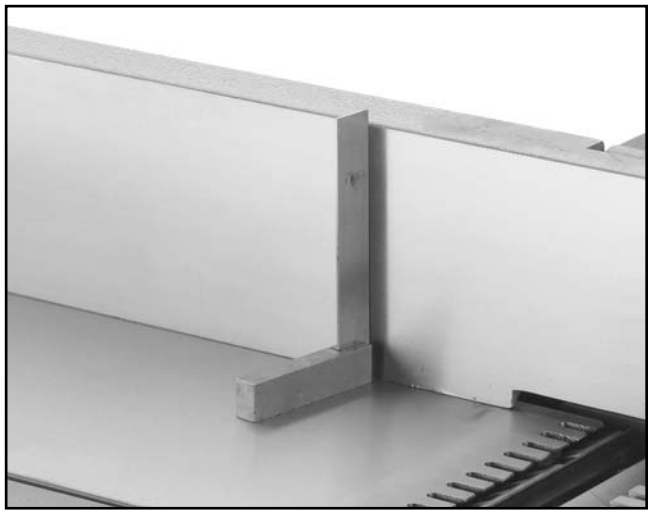

Figure 14. Use of square to align fence.

2. While holding the fence adjusting handle, loosen the angle setting lock knob and the checknut on the 90° stop screw as shown in **Figure 15.** Turn the stop screw against the sliding bracket until the fence contacts the edge of the square evenly.

3. Tighten the checknut on the stop screw and tilt the fence back, then forward against the stop.

4. Recheck with the square. Tightening the checknut will move the stop bolt slightly, so some trial-and-error may be necessary to perfect your settings.

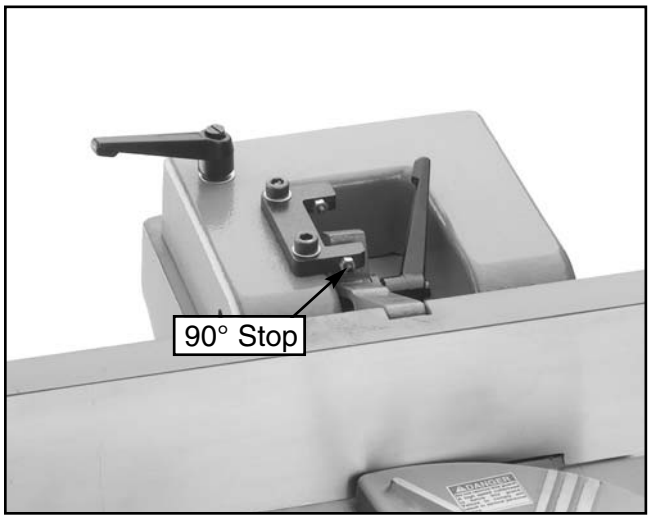

Figure 15. Setting the 90° stop.

45° Fence Stop

1. Place a 45° gauge on the outfeed table fairly close to the cutterhead as shown in **Figure 16**.

Figure 16. Using a 45° gauge to align fence.

2. While holding the fence adjusting handle, loosen the angle setting lock knob and the checknut on the 45° stop screw as shown in **Figure 17**. Turn the stop screw against the sliding bracket until the fence contacts the edge of the 45° gauge evenly.

3. Tighten the checknut on the stop screw and tilt the fence forward, then back against the stop.

4. Recheck with the 45° gauge. Tightening the checknut will move the stop bolt slightly, so some trial-and-error may be necessary to perfect your settings.

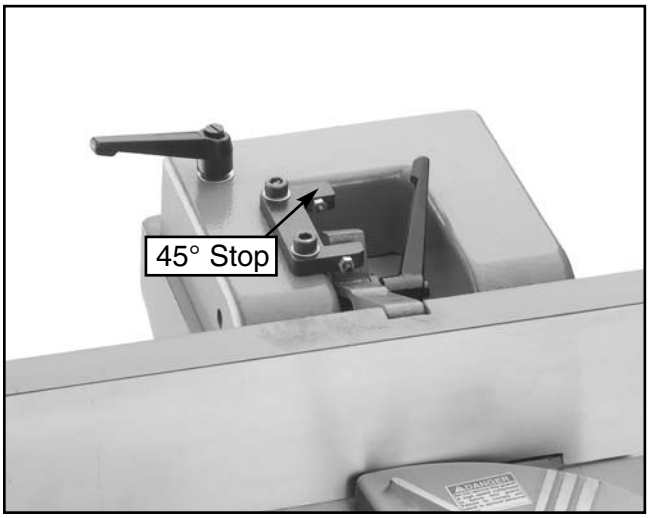

Figure 17. Setting the 45° stop.

SECTION 6: OPERATIONS

Test Run

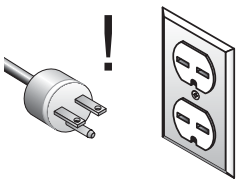

WARNING

Disconnect power to the machine when performing any maintenance, assembly or adjustments. Failure to do this may result in serious personal injury.

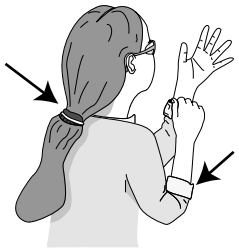

WARNING

Keep loose clothing rolled up and out of the way of machinery and keep hair pulled back.

WARNING

Wear safety glasses during the entire operation process. Failure to comply may result in serious personal injury.

Once assembly is complete and adjustments are done to your satisfaction, you are ready to test run the machine.

Turn on the power supply at the main panel. Press the START button. Make sure that your finger is poised on the STOP button, just in case there's a problem. The jointer should run smoothly, with little or no vibration or rubbing noises. Strange or unnatural noises should be investigated and corrected before operating the machine further.

If you cannot easily locate the source of an unusual noise or vibration, contact our service department for help.

Stock Inspection

If the stock has large or loose knots, consider finding another workpiece. Knots in a workpiece can be dangerous to the operator, as well as destructive to equipment.

When jointing, always cut with the grain rather than against it. Cutting against the grain (going against the pattern of the wood's growth rings) chips the wood instead of cutting it, making the workpiece rough and irregular. Look at the side of your board. If the direction of the grain structure facing the cutterhead runs toward the cutterhead as it sits on the infeed table, your cut will be with the grain as shown in **Figure 18.**

Occasionally, you will find woods that defy all rules. In those rare cases, it is best to feed the workpiece slowly and take several shallow cuts. A few extra passes will hurt much less than a ruined workpiece.

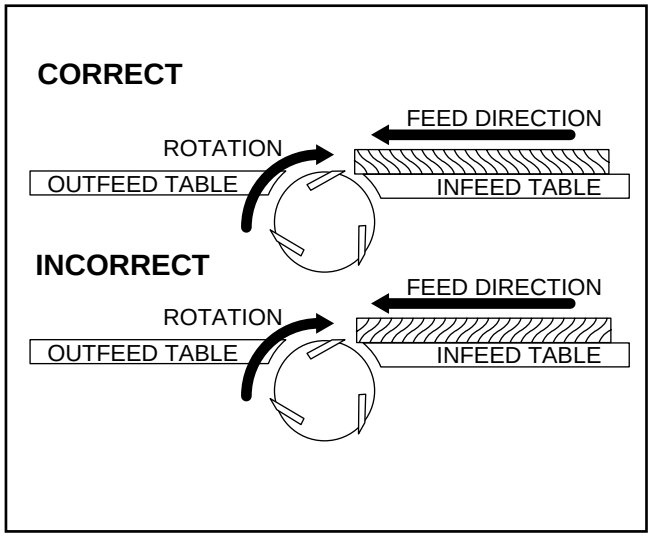

Figure 18. Correct and incorrect grain alignment to cutterhead.

Edge Jointing

The purpose of edge jointing is to produce a finished, flat-edged surface that is suitable for joinery or finishing. Jointing is also a necessary step prior to ripping stock to width on a table saw or radial arm saw.

1. Make sure the fence is set to 90°. Double check it with a square.

2. Inspect stock for soundness and grain direction.

3. If the board is bowed (curved), place the concave edge down on the infeed table.

4. Holding the stock firmly against the fence and table, feed the stock slowly and evenly over the cutterhead as shown in **Figure 19.**

Figure 19. Operator position for edge jointing.

Beveling

Beveling an edge is essentially the same operation as edge jointing, except that the fence is tilted to a specified angle. Use extra care to ensure that the edge makes solid contact with the infeed and outfeed tables at all times.

1. Use a bevel gauge to determine the desired angle. Then use the bevel to transfer this angle to the fence.

2. Tilt the fence by loosening the angle setting lock knob and moving the fence to the desired angle. Lock the knob.

3. Inspect stock for soundness and grain direction.

4. Slowly and evenly feed stock through the cutterhead. Make sure the face of the stock is completely flat against the fence and the edge is making solid contact on the infeed and outfeed tables as shown in **Figure 20.**

5. Achieving the full bevel will probably take several passes. Remember not to take more than 1⁄16" in one pass.

Figure 20. Fence position for bevel jointing.

Surface Planing

The purpose of planing on a jointer is to produce one flat surface. The theory behind this is that once you have one flat surface on a board, the board can then more readily be milled to precise, flat dimensions on a thickness planer. It is nearly impossible to surface plane both sides of a board effectively because the two surfaced sides will retain any warps, cups, or twists.

1. Inspect your lumber for soundness and grain direction.

2. If the stock is cupped (warped), place the concave side down and slowly feed it over the cutterhead as shown in **Figure 21.**

⚠WARNING

Always use push paddles when planing the surface of a board. Failure to comply may result in serious personal injury.

Figure 21. Correct method for surface planing.

3. Inspect your results. Most likely, many passes will be necessary before your lumber has a flat surface.

4. If the stock has large or loose knots, consider finding another workpiece. Knots in a workpiece can be dangerous to the operator, as well as destructive to equipment.

SECTION 7: MAINTENANCE

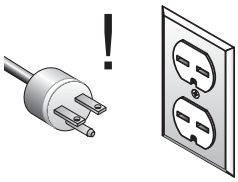

⚠WARNING

Disconnect power to the machine when performing any maintenance, assembly or adjustments. Failure to do this may result in serious personal injury.

⚠WARNING

Keep loose clothing rolled up and out of the way of machinery and keep hair pulled back.

⚠WARNING

Wear safety glasses during the entire maintenance process. Failure to comply may result in serious personal injury.

General

Regular periodic maintenance on your Ultimate Series Jointer will ensure its optimum performance. Make a habit of inspecting your jointer each time you use it. Check for the following conditions and repair or replace when necessary.

1. Loose mounting bolts.
2. Worn switch.
3. Worn or damaged cords and plugs.
4. Damaged V-belt.
5. Any other condition that could hamper the safe operation of this machine.

Tables

Tables can be kept rust-free with regular applications of products like Boeshield® T-9. For long term storage you may want to consider products like Kleen Bore's Rust Guardit™.

Lubrication

Since most of the bearings are sealed and permanently lubricated, simply leave them alone until they need to be replaced. The cutterhead bearings do need grease after every 80 hours of use. Unplug the machine and grease each of the two grease fittings located on each end of the cutterhead. The front grease fitting is located in a small hole and the other is just under the bottom edge of the fence.

V-Belt

Inspect regularly for wear; replace when necessary with a size A-36 belt.

SECTION 8: CLOSURE

The following pages contain general machine data, parts diagrams/lists, a troubleshooting guide and Warranty/Return information for your Ultimate Series Jointer.

If you need parts or help in assembling your machine, or if you need operational information, we encourage you to call our Service Department. Our trained service technicians will be glad to help you.

If you have comments dealing specifically with this manual, please write to our Bellingham, Washington location using the address in **Section 3 Introduction.**

We have included some important safety measures that are essential to this machine's operation. While most safety measures are generally universal, Grizzly reminds you that each workshop is different and safety rules should be considered as they apply to your specific situation.

⚠WARNING

Operating this equipment has the potential for flying debris to cause eye injury. Always wear safety glasses or goggles when operating equipment. Everyday glasses or reading glasses only have impact resistant lenses, they are not safety glasses. Be certain the safety glasses you wear meet the appropriate standards of the American National Standards Institute (ANSI).

We recommend you keep a copy of our current catalog for complete information regarding Grizzly's warranty and return policy. If you need additional technical information relating to this machine, or if you need general assistance or replacement parts, please contact the Service Department listed in **Section 3 Introduction.**

Additional information sources are necessary to realize the full potential of this machine. Trade journals, woodworking magazines, and your local library are good places to start.

⚠WARNING

The Ultimate Series Jointers were specifically designed for jointing operations. DO NOT MODIFY AND/OR USE THIS MACHINE FOR ANY OTHER PURPOSE. Modifications or improper use of this tool will void the warranty. If you are confused about any aspect of this machine, DO NOT use it until all your questions have been answered. Serious personal injury may occur.

⚠WARNING

Like all power tools, there is danger associated with the Ultimate Series Jointers. Accidents are frequently caused by lack of familiarity or failure to pay attention. Use this tool with respect and caution to lessen the possibility of operator injury. If normal safety precautions are overlooked or ignored, serious personal injury may occur.

TROUBLESHOOTING

SYMPTOM	POSSIBLE CAUSE	CORRECTIVE ACTION
Motor will not start.	1. Low voltage. 2. Open circuit in motor or loose connections.	1. Check power line for proper voltage. 2. Inspect all lead connections on motor for loose or open connections.
Motor will not start; fuses or circuit breakers blow.	1. Short circuit in line cord or plug. 2. Short circuit in motor or loose connections. 3. Incorrect fuses or circuit breakers in power line.	1. Inspect cord or plug for damaged insulation and shorted wires. 2. Inspect all connections on motor for loose or shorted terminals or worn insulation. 3. Install correct fuses or circuit breakers.
Motor overheats.	1. Motor overloaded. 2. Air circulation through the motor restricted.	1. Reduce load on motor. 2. Clean out motor to provide normal air circulation.
Motor stalls (resulting in blown fuses or tripped circuit).	1. Short circuit in motor or loose connections. 2. Low voltage. 3. Incorrect fuses or circuit breakers in power line. 4. Motor overloaded.	1. Inspect connections on motor for loose or shorted terminals or worn insulation. 2 Correct the low voltage conditions. 3. Install correct fuses or circuit breakers. 4. Reduce load on motor.
Machine slows when operating.	1. Feed rate too high. 2. Depth of cut too great.	1. Feed workpiece slower. 2. Reduce depth of cut.
Loud, repetitious noise coming from machine	1. Pulley set screws or keys are missing or loose. 2. Motor fan is hitting the cover. 3. V-belt is defective.	1. Inspect keys and set screws. Replace or tighten if necessary. 2. Tighten fan or shim cover. 3. Replace V-belt. See **Maintenance.**
Machine is loud when cutting. Overheats or bogs down in the cut.	1. Excessive depth of cut. 2. Knives are dull.	1. Decrease depth of cut. 2. Sharpen knives.

⚠WARNING

DO NOT make adjustments while the jointer is running. Ensure that the switch is off, power is disconnected and moving parts have stopped before making adjustments. Failure to comply may result in serious personal injury.

MACHINE DATA SHEET

Customer Service #: (570) 546-9663 • To Order Call: (800) 523-4777 • Fax #: (800) 438-5901

8" JOINTER MODEL G9859

Design Type ..... Floor Model

Overall Dimensions:

Table Size	73⅜" x 8½"
Height (from Floor to Table)	30¼"
Overall Length	73⅜"
Overall Width	31"
Fence	4¾" x 39¼"
Shipping Weight	900 lbs.

Capacities:

Maximum Depth of Cut	5⁄16"
Maximum Width of Cut	7⅞"
Cutterhead Speed	5900 R.P.M.
Cuts Per Minute	17,700
Bevel Jointing	90° - 45°
Cutterhead Diameter	4"
Knife Size	8" x 1⅛" x ⅛"
Dust Hood Size	4"

Construction:

Table	Precision Ground Cast Iron
Fence Assembly	Precision Ground Cast Iron
Body Assembly	Cast Iron
Base	Cast Iron
Cutterhead	3 Knife Slots w/ Shielded Ball Bearings and Grease Fittings
Guard	Cast Aluminum

Motor:

Type	TEFC Capacitor Start Induction
Horsepower	3 H.P.
Phase / Voltage / Amps	Single / 220V / 15A
Cycle / R.P.M.	60 Hertz / 3500 R.P.M.
Switch	Magnetic W/ Thermal Overload Protector
Power Transfer	Twin V-Belt
Bearings	Sealed & Permanently Lubricated

Features:

Fence	Center Mounted, Positive Stops at 45° and 90°
Table Movement	Independently Adjustable, Handwheel Precision
Infeed & Outfeed Tables	Heat Treated
	Pedestal Mounted ON/OFF Switch
	Noise Dampening System

Specifications, while deemed accurate, are not guaranteed.

G9859 8" JOINTER

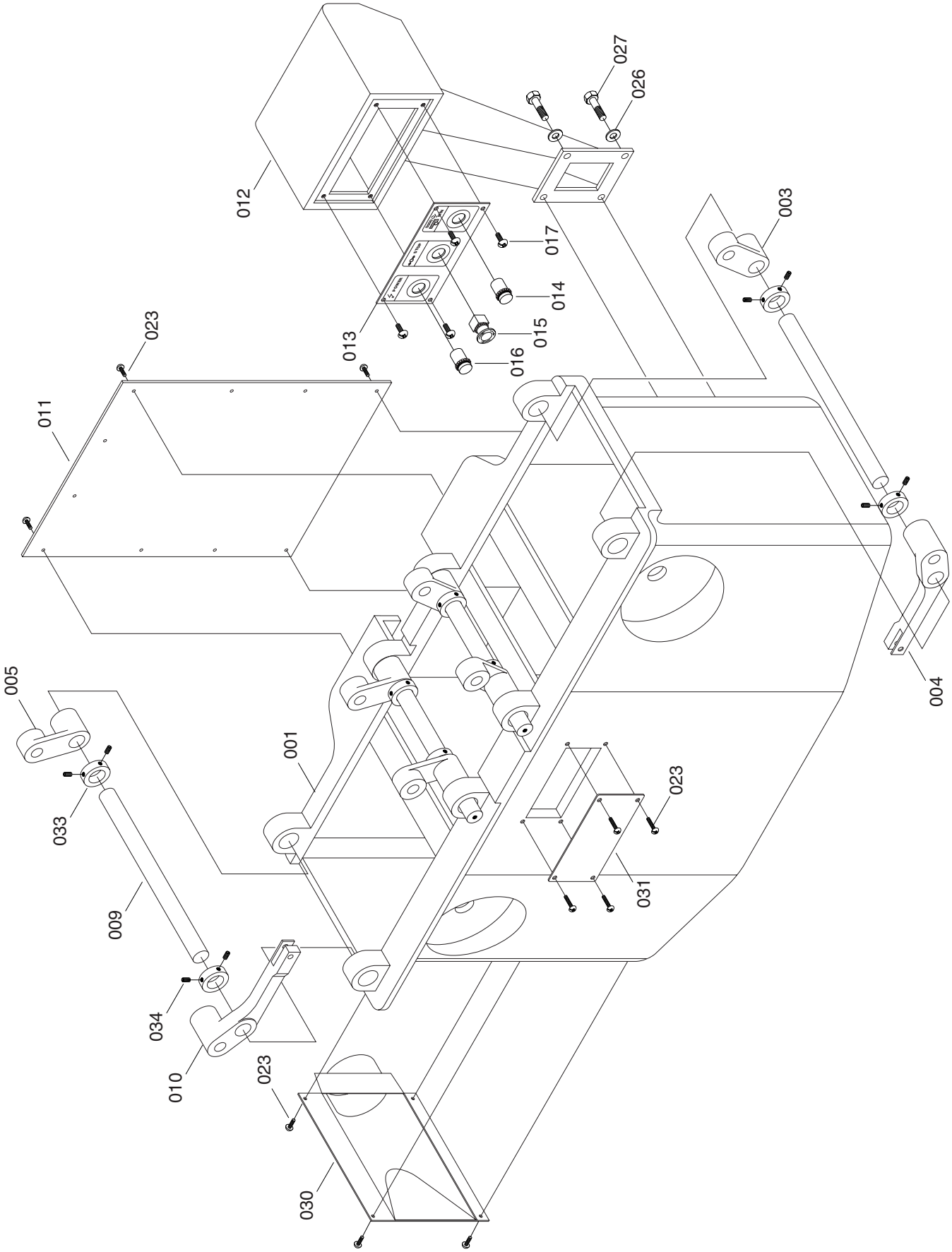

G9859 8" JOINTER

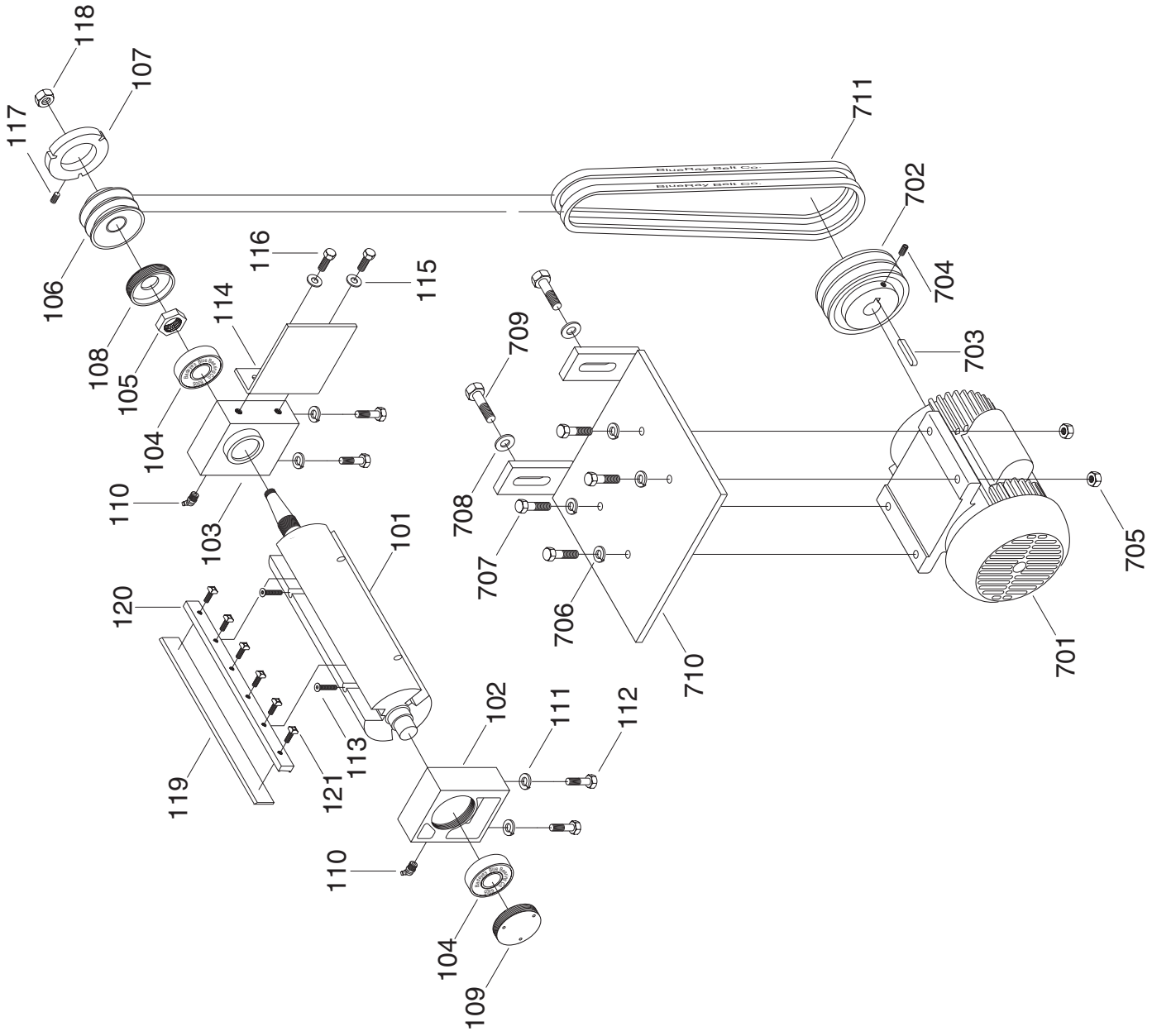

G9859 8" JOINTER

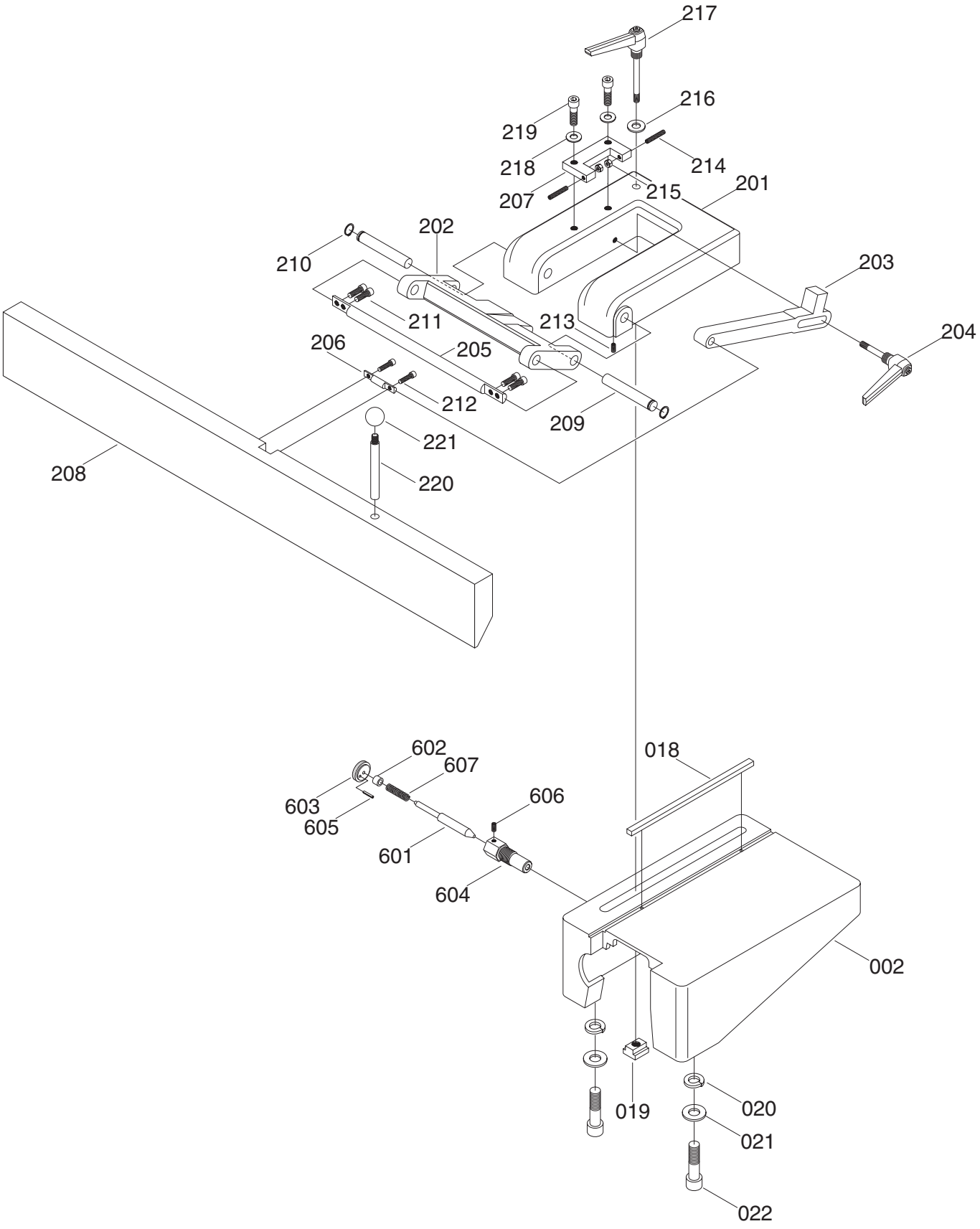

G9859 8" JOINTER

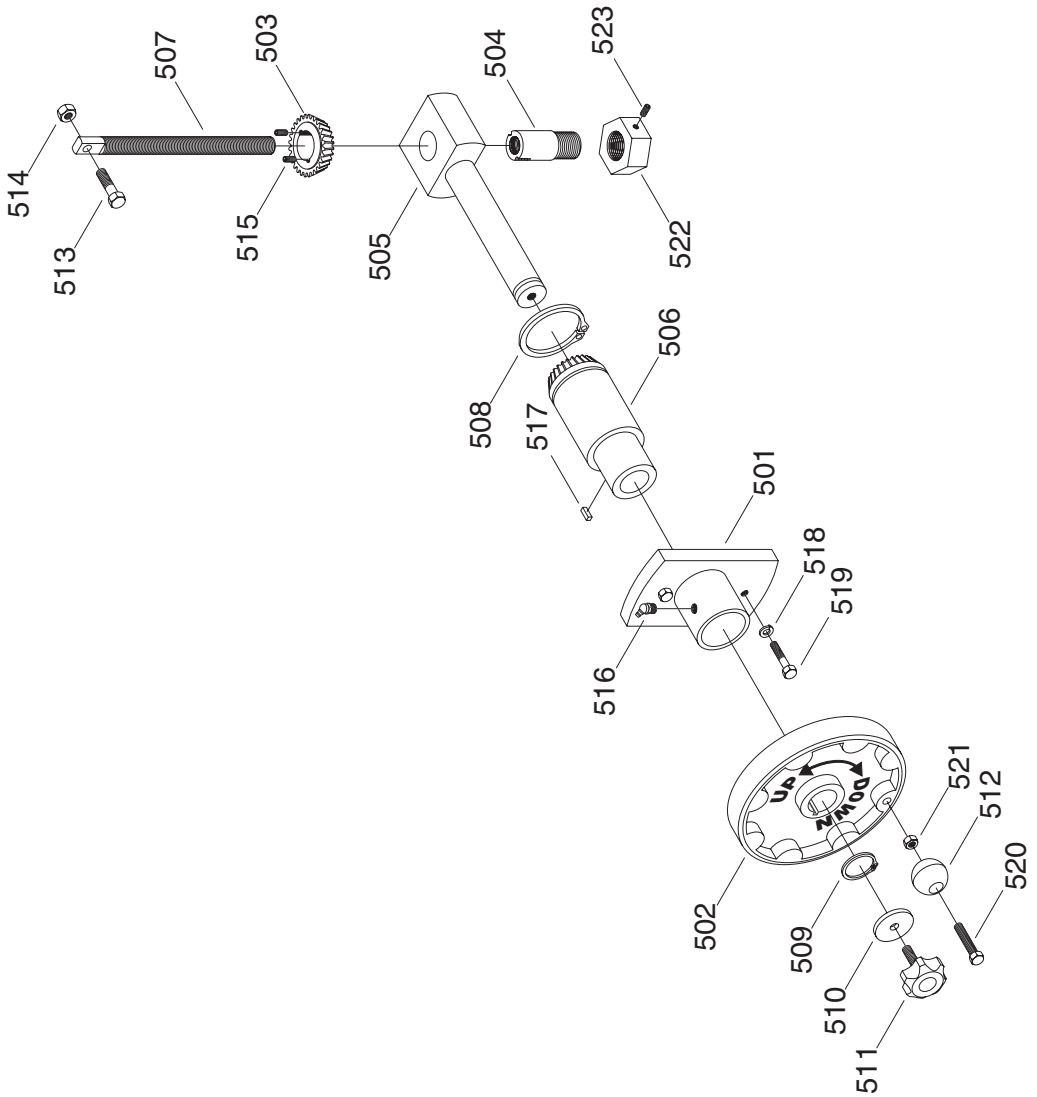

G9859 8" JOINTER

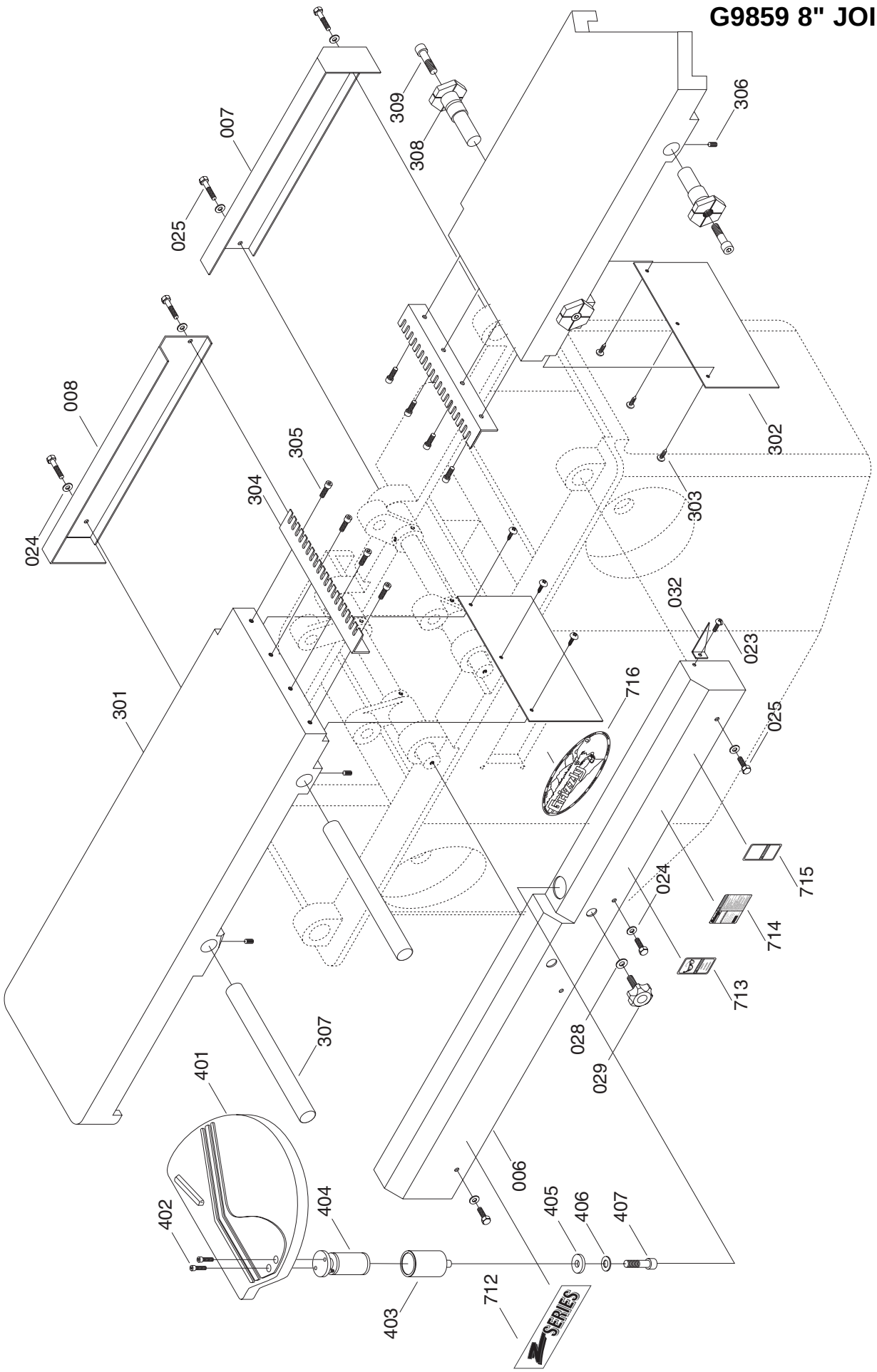

Ref#	Part#	Description
001	P9859001	BASE
002	P9859002	FENCE SEAT
003	P9859003	TABLE SUPPORT
004	P9859004	TABLE LIFTING ARM
005	P9859005	TABLE SUPPORT
006	P9859006	FRONT HOUSING
007	P9859007	RIGHT REAR HOUSING
008	P9859008	LEFT REAR HOUSING
009	P9859009	TABLE HEIGHT SPINDLE
010	P9859010	TABLE LIFTING ARM
011	P9859011	BASE REAR COVER
012	P9859012	SWITCH BOX
013	P9859013	SWITCH PLATE
014	P9859014	SWITCH (GREEN)
015	P9859015	SWITCH (RED)
016	P9859016	PUSH BUTTON SWITCH (WHITE)
017	PS39M	PHLP HD SCR M8-1.25 x 10
018	PK56M	KEY 10 x 8 x 260
019	P9859019	SLIDER
020	PW14	FLAT WASHER 5/8"
021	PW08M	FLAT WASHER M16
022	PB72M	HEX BOLT M16-1.75 x 30
023	PS24M	PHLP HD SCR M6-1.0 x 10
024	PW07	FLAT WASHER 5/16"
025	PB07M	HEX BOLT M8-1.25 X 25
026	PW01	FLAT WASHER 1/2"
027	PB12M	HEX BOLT M12-1.75 X 55
028	PW02	FLAT WASHER 3/8"
029	P9859029	KNOB
030	P9859030	DUST HOOD
031	P9859031	PLATE COVER
032	P9859032	INDEX
033	P9859033	STOP COLLAR
034	PSS20M	SET SCREW M8-1.25 X 8
101	P9859101	CUTTERHEAD
102	P9859102	HOUSING HEAD AXLE BOX (R.H.)
103	P9859103	HOUSING
104	P9859104	BEARING 6305-VV
105	P9859105	CIRCULAR NUT
106	P9859106	CUTTERHEAD BELT WHEEL
107	P9859107	CUTTERHEAD STOP PLATE
108	P9859108	CUTTERHEAD COVER (SMALL)
109	P9859109	CUTTERHEAD COVER (SMALL)
110	P9859110	OIL FEEDER 1/16"
111	PLW06M	LOCK WASHER M10
112	PB14M	HEX BOLT M10-1.5 X 35
113	P9859113	SPECIAL SCREW
114	P9859114	CASE PLATE
115	PW04M	FLAT WASHER M10
116	PB65	HEX BOLT 3/8"-16 X 5/8"

Ref#	Part#	Description
117	PSS09M	SET SCREW M8-1.25 X 20
118	P9859118	SPECIAL HEX NUT
119	P9859119	CUTTER
120	P9859121	GIB
121	P9859122	CUTTER KNOB
201	P9859201	FENCE SEAT
202	P9859202	ANGLE FENCE SEAT
203	P9859203	ANGLE SEAT FASTEN ROD
204	P9859204	KNOB
205	P9859205	FENCE ROD (LONG)
206	P9859206	FENCE ROD (SHORT)
207	P9859207	ANGLE PLATE
208	P9859208	FENCE
209	P9859209	FENCE ROD
210	P9859210	SPECIAL RETAINER RING
211	PSB13M	CAP SCREW M8-1.25 X 30
212	PSB06M	CAP SCREW M6-1.0 X 25
213	PSS04M	SET SCREW M6-1.0 X 12
214	PSS29M	SET SCREW M6-1.0 X 35
215	PN01M	HEX NUT M6-1.0
216	PW01	FLAT WASHER 1/2"
217	P9859217	KNOB
218	PW02	FLAT WASHER 3/8"
219	PSB47M	CAP SCREW M10-1.5 X 40
220	P9859220	FENCE ADJUSTMENT ROD
221	P9859221	KNOB
301	P9859301	BED
302	P9859302	PLATE
303	PSB26M	CAP SCREW M6-1.0 X 12
304	P9859304	NOISE DAMPENER
305	PSB31M	CAP SCREW M8-1.25 X 25
306	PSS16M	SET SCREW M8-1.25 X 10
307	P9859307	BED PIVOT ROD
308	P9859308	BED PIVOT PIN
309	PSB70M	CAP SCREW M12-1.75 X 30
401	P9859401	CUTTERHEAD GUARD
402	PSB06M	CAP SCREW M6-1.0 X 25
403	P9859403	SPRING SHAFT HOUSING
404	P9859404	SPRING SHAFT
405	PW06M	FLAT WASHER M12
406	PW01M	FLAT WASHER 1/2"
407	PSB36M	CAP SCREW M12-1.75 X 25
501	P9859501	LIFT ROD COLLAR
502	P9859502	HANDWHEEL
503	P9859503	GEAR
504	P9859504	COLLAR
505	P9859505	LIFT ROD
506	P9859506	GEAR
507	P9859507	LIFT ROD
508	P9859508	SPECIAL RETAINER RING

Ref#	Part#	Description
509	P9859509	SPECIAL RETAINER RING
510	P9859510	SPECIAL WASHER
511	P9859511	LOCK KNOB
512	P9859512	HANDWHEEL KNOB
513	PSB47M	CAP SCREW M10-1.5 X 40
514	PN03M	HEX NUT M8-1.25
515	PSS04M	SET SCREW M6-1.0 X 12
516	P9859516	LUBE FITTING 3⁄16"
517	PK20M	KEY 5 X 5 X 15
518	PLW01	LOCK WASHER 5⁄16"
519	PB07M	HEX BOLT M8-1.25 X 25
520	PB58	HEX BOLT 3⁄8"-16 X 2"
521	PN08	HEX NUT 3⁄8"-16
522	P9859522	SPECIAL NUT
523	PSS02M	SET SCREW M6-1.0 X 6
601	P9859601	ROD
602	P9859602	COLLAR
603	P9859603	HANDLE
604	P9859604	BRAKE CASING

Ref#	Part#	Description
605	P9859605	PIN
606	PSS02M	SET SCREW M6-1.0 X 6
607	P9859607	SPRING
701	P9859701	MOTOR 3 H.P.
702	P9859702	PULLEY
703	PK54M	KEY 7 X 7 X 45
704	PSS08M	SET SCREW 5⁄16"-18 X 1⁄2"
705	PN02M	HEX NUT M10-1.5
706	PLW04	LOCK WASHER 3⁄8"
707	PB14M	HEX BOLT M10-1.5 X 35
708	PW01	FLAT WASHER 1⁄2"
709	PB25M	HEX BOLT M12-1.75 X 25
710	P9859710	MOTOR MOUNT PLATE
711	PVA47	V-BELT (A-47")
712	P9859712	Z SERIES LABEL
713	P9859713	SAFETY GLASSES WARNING
714	P9859714	MACHINE ID WARNING
715	P9859715	PUSH BLOCK WARNING
716	P9859716	CAST LOGO

MACHINE DATA SHEET

Grizzly Industrial, Inc.®

Customer Service #: (570) 546-9663 • To Order Call: (800) 523-4777 • Fax #: (800) 438-5901

12" JOINTER MODEL G9860/G9860ZX

Design Type ..... Floor Model

Overall Dimensions:

Table Size	80" x 12½"
Height (from Floor to Table)	30¼"
Overall Length	80"
Overall Width	34 1/16"
Fence	4¾" x 39¼"
Shipping Weight	1080 lbs.

Capacities:

Maximum Depth of Cut	5/16"
Maximum Width of Cut	11 13/16"
Cutterhead Speed	5900 R.P.M.
Cuts Per Minute	17,700
Bevel Jointing	90° - 45°
Cutterhead Diameter	4"
Knife Size	12" x 1⅛" x ⅛"
Dust Hood Size	4"

Construction:

Table	Precision Ground Cast Iron
Fence Assembly	Precision Ground Cast Iron
Body Assembly	Cast Iron
Base	Cast Iron
Cutterhead (G9860)	3 Knife Slots w/ Shielded Ball Bearings and Grease Fittings
Cutterhead (G9860ZX)	Indexed Spiral Cutterhead
Guard	Cast Aluminum

Motor:

Type	TEFC Capacitor Start Induction
Horsepower	3 H.P.
Phase / Voltage / Amps	Single / 220V / 15A
Cycle / R.P.M.	60 Hertz / 3500 R.P.M.
Switch	Magnetic W/ Thermal Overload Protector
Power Transfer	Twin V-Belt
Bearings	Sealed & Permanently Lubricated

Features:

Fence	Center Mounted, Positive Stops at 45° and 90°
Table Movement	Independently Adjustable, Handwheel Precision
Infeed & Outfeed Tables	Heat Treated
	Pedestal Mounted ON/OFF Switch
	Noise Dampening System

Specifications, while deemed accurate, are not guaranteed.

G9860 12" JOINTER

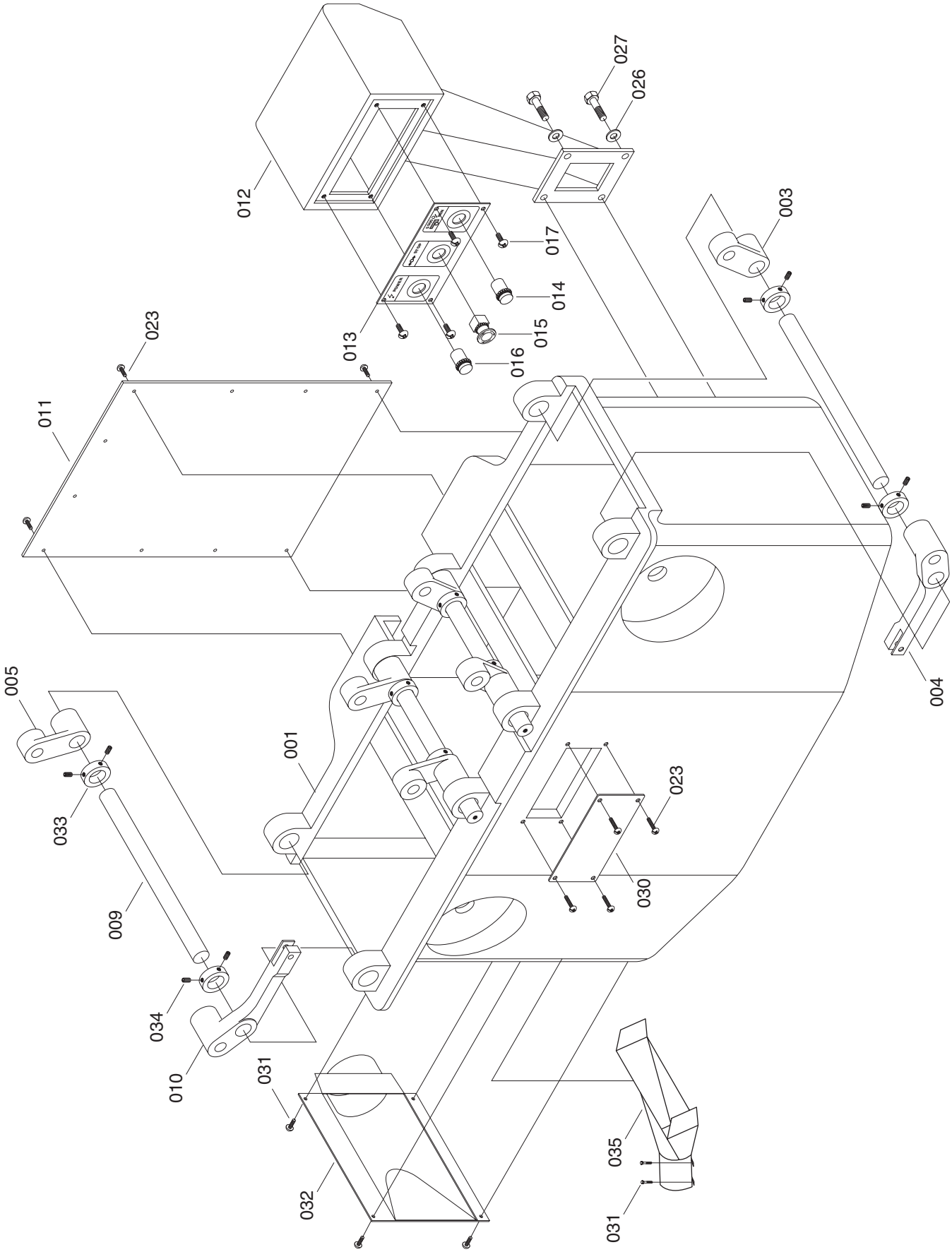

G9860 12" JOINTER

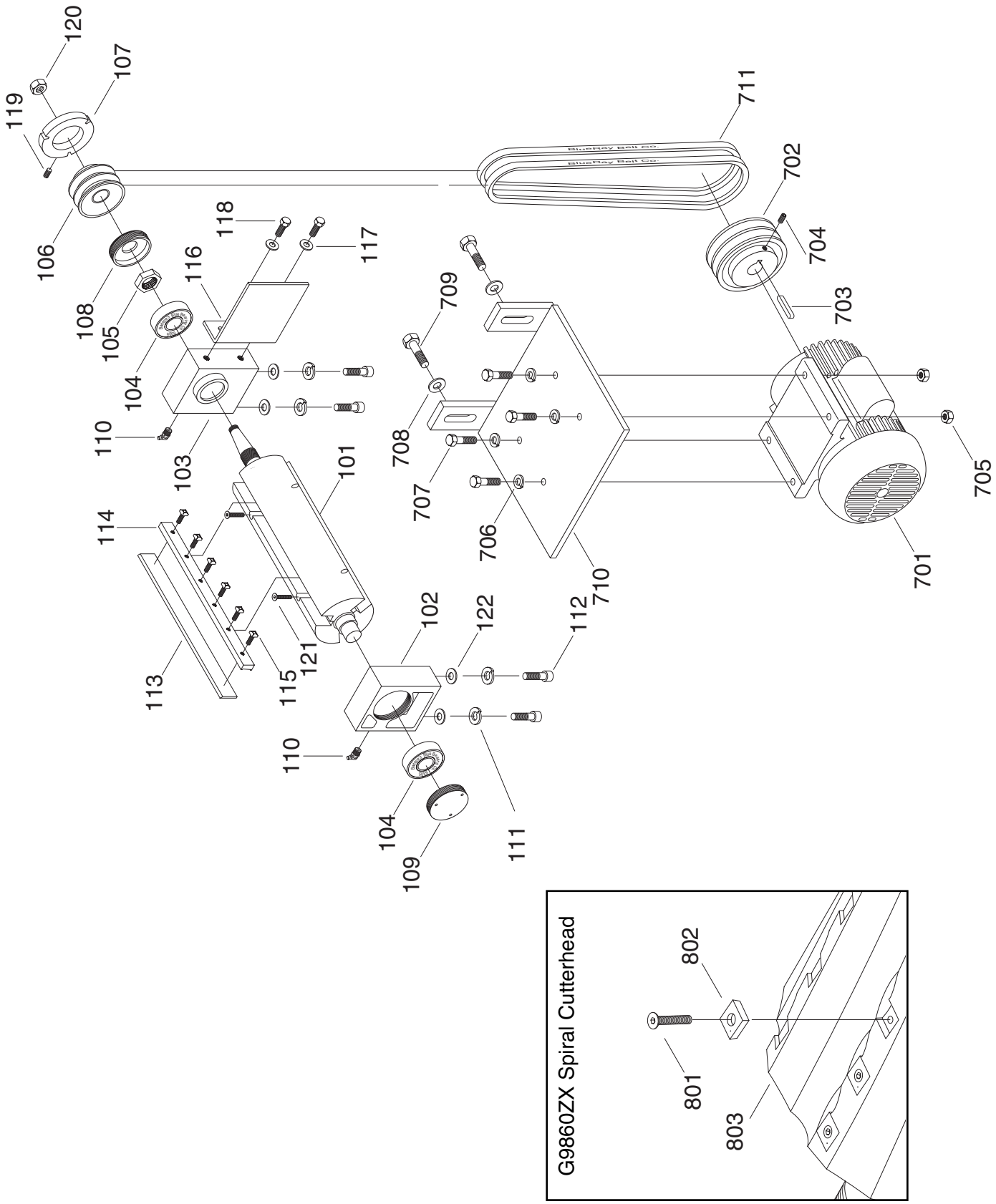

G9860 12" JOINTER

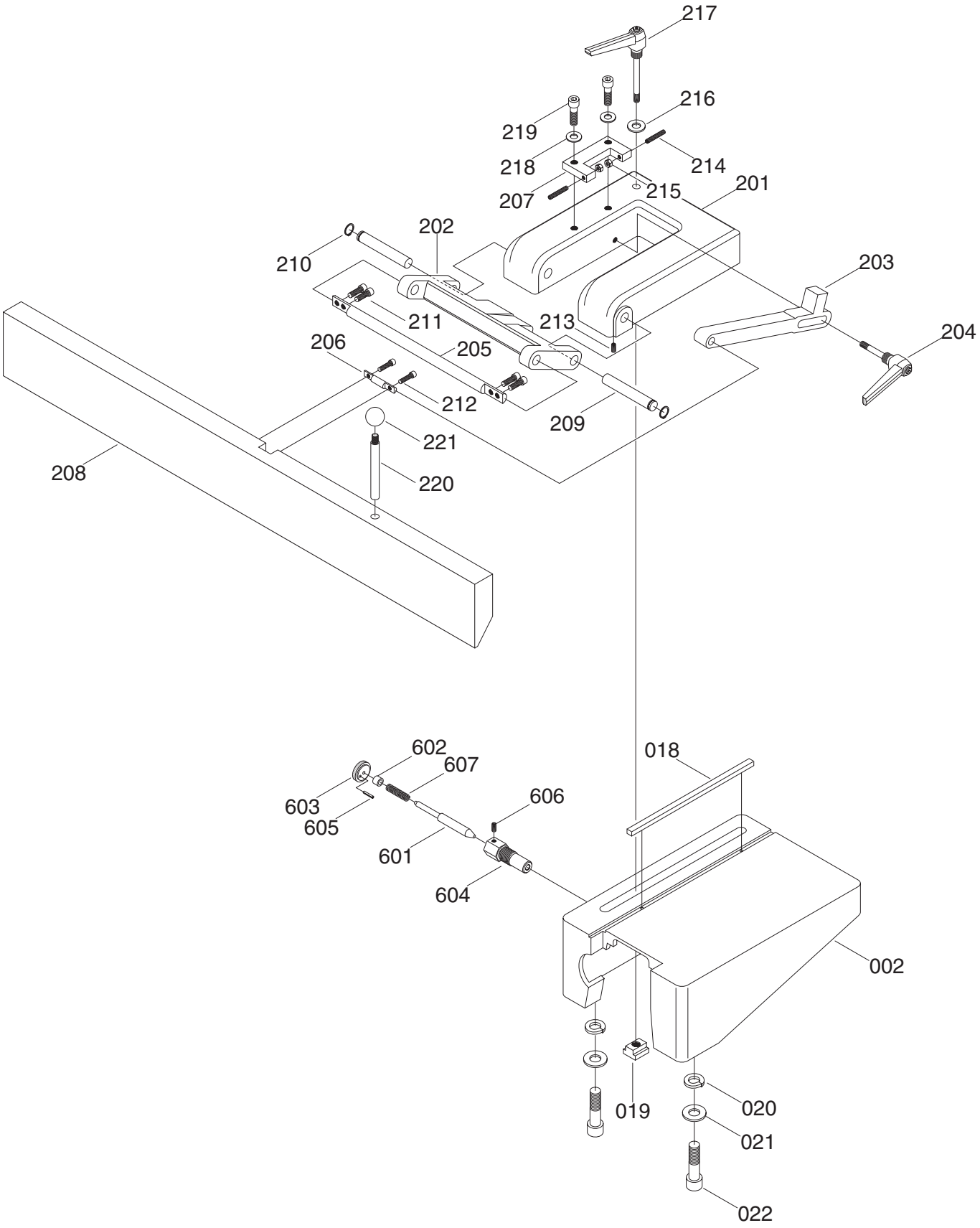

G9860 12" JOINTER

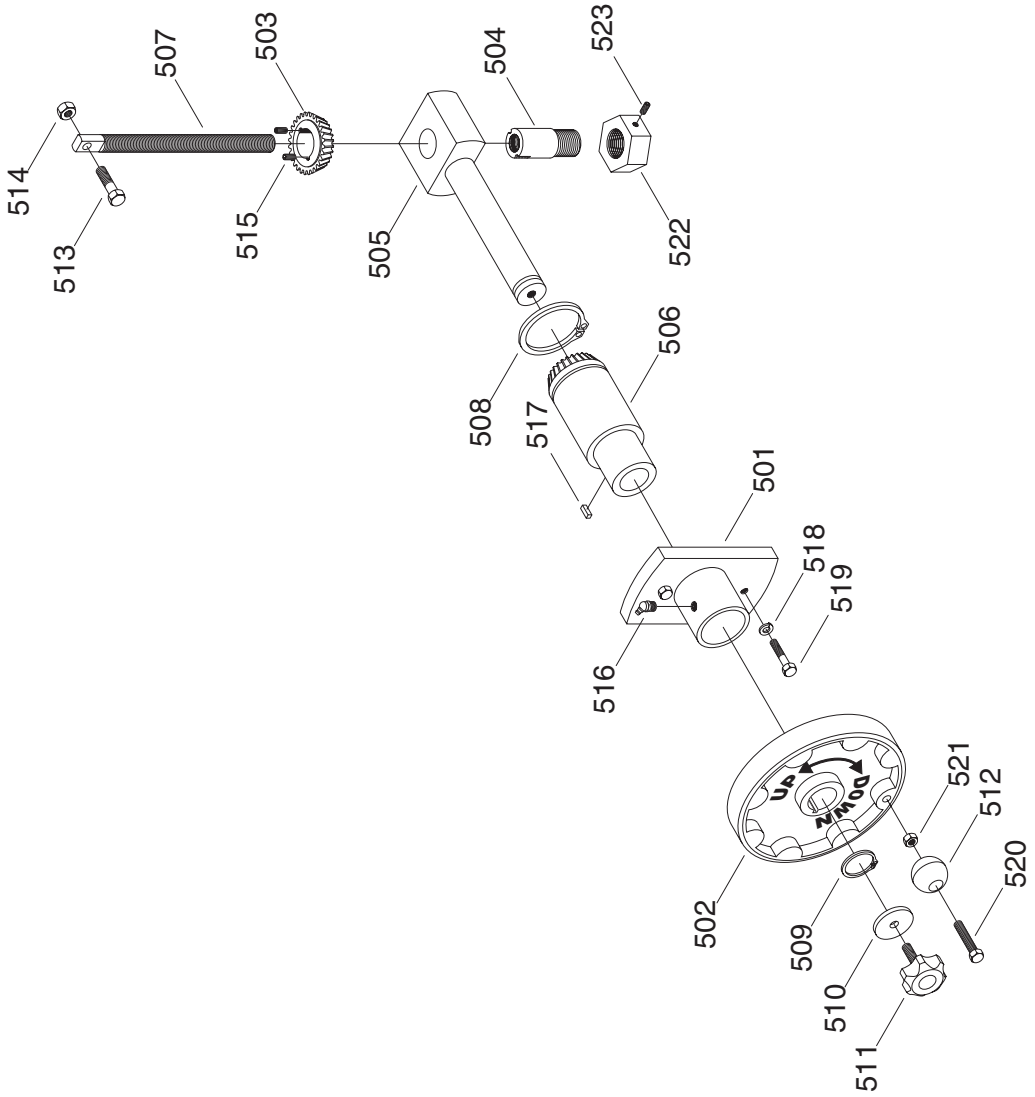

G9860 12" JOINTER

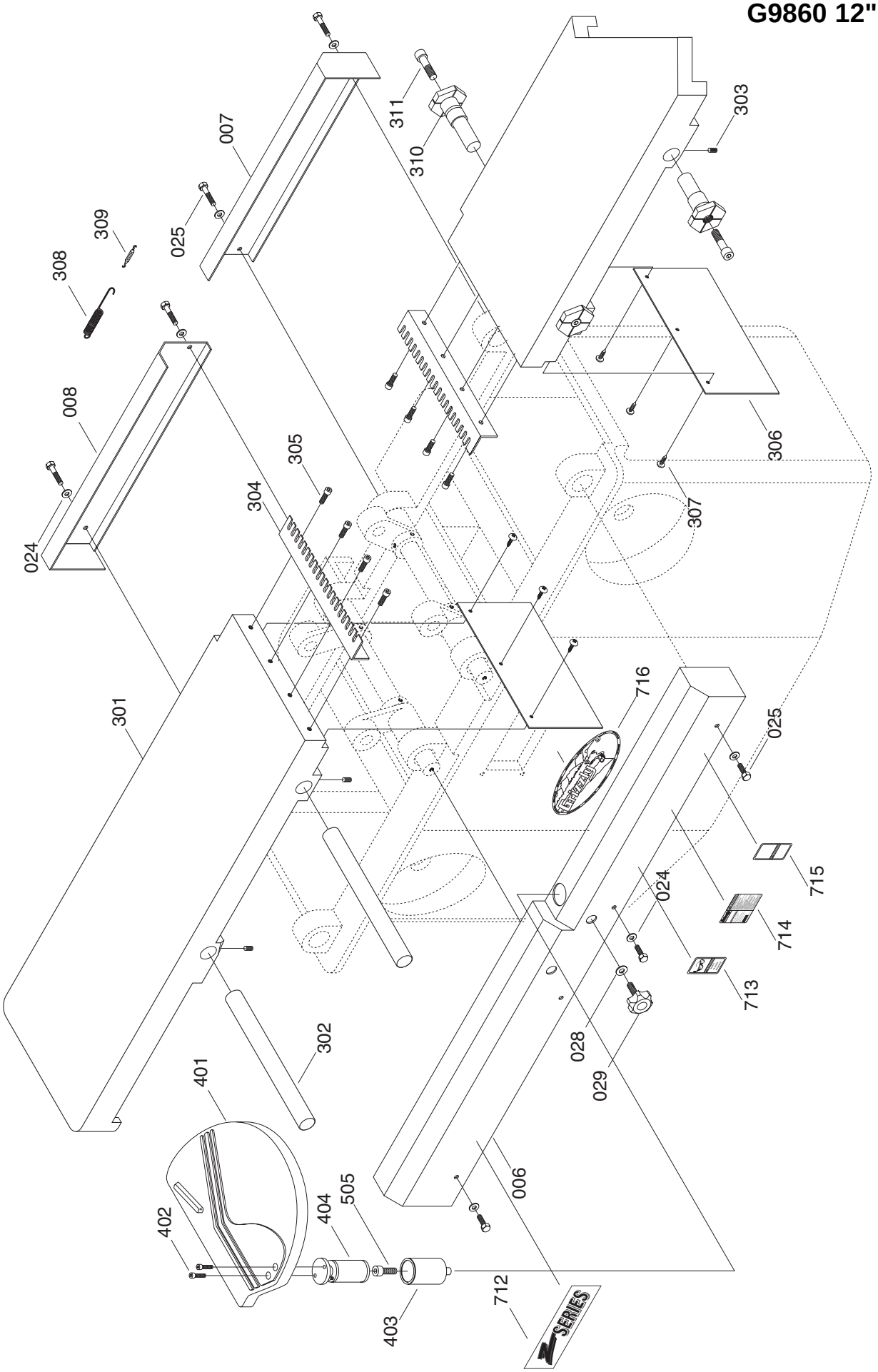

Ref#	Part#	Description
001	P9860001	BASE
002	P9860002	FENCE SEAT
003	P9859003	TABLE SUPPORT
004	P9859004	TABLE LIFTING ARM
005	P9859005	TABLE SUPPORT
006	P9859006	FRONT HOUSING
007	P9859007	RIGHT REAR HOUSING
008	P9859008	LEFT REAR HOUSING
009	P9860009	TABLE HEIGHT SPINDLE
010	P9859010	TABLE LIFTING ARM
011	P9859011	BASE REAR COVER
012	P9859012	SWITCH BOX
013	P9859013	SWITCH PLATE
014	P9859014	SWITCH (GREEN)
015	P9859015	SWITCH (RED)
016	P9859016	PUSH BUTTON SWITCH (WHITE)
017	PS39M	PHLP HD SCR M8-1.25 X 10
018	PK55M	KEY 10 X 8 X 300
019	P9859019	SLIDER
020	PW14	FLAT WASHER 5/8"
021	PW08M	FLAT WASHER M16
022	PB72M	HEX BOLT M16-1.75 X 30
023	PS24M	PHLP HEAD BOLT M6-1.0 X 10
024	PW07	FLAT WASHER 5/16"
025	PB07M	HEX BOLT M8-1.25 X 25
026	PW01	FLAT WASHER 1/2"
027	PB12M	HEX BOLT M12-1.75 X 55
028	PW02	FLAT WASHER 3/8"
029	P9859029	KNOB
030	P9859031	PLATE
031	PB02M	HEX BOLT M6-1.0 X 12
032	P9860032	DUST COVER
033	P9859033	STOP COLLAR
034	PSS20M	SET SCREW M8-1.25 X 8
035	P9860035	DUST CHUTE
101	P9860101	CUTTERHEAD
102	P9859102	HOUSING HEAD AXLE BOX (R.H.)
103	P9859103	HOUSING
104	P9859104	BEARING 6305-VV
105	P9859105	CIRCULAR NUT
106	P9859106	CUTTERHEAD BELT WHEEL
107	P9859107	CUTTERHEAD STOP PLATE
108	P9859108	CUTTERHEAD COVER (SMALL)
109	P9859109	CUTTERHEAD COVER (SMALL)
110	P9859110	OIL FEEDER 1/16"
111	PLW06M	LOCK WASHER M10
112	PB14M	HEX BOLT M10-1.5 X 35
113	P9860113	CUTTER
114	P9860114	GIB
115	P9859121	CUTTER KNOB

Ref#	Part#	Description
116	P9859119	BRACKET
117	PW04M	FLAT WASHER M10
118	PB65	HEX BOLT 3/8"-16 X 5/8"
119	PSS09M	SET SCREW M8-1.25 X 20
120	P9859118	SPECIAL HEX NUT
121	PS11M	PHLP HD SCR M6-1.0 X 16
122	PWO4M	FLAT WASHER M10
201	P9860201	FENCE SEAT
202	P9859202	ANGLE FENCE SEAT
203	P9860203	ANGLE SEAT FASTEN ROD
204	P9859204	LOCK HANDLE
205	P9859205	FENCE ROD (LONG)
206	P9859206	FENCE ROD (SHORT)
207	P9859207	ANGLE PLATE
208	P9859208	FENCE
209	P9859209	FENCE ROD
210	P9859210	SPECIAL RETAINER RING
211	PSB13M	CAP SCREW M8-1.25 X 30
212	PSB06M	CAP SCREW M6-1.0 X 25
213	PSS04M	SET SCREW M6-1.0 X 12
214	PSS29M	SET SCREW M6-1.0 X 35
215	PN01M	HEX NUT M6-1.0
216	PW01	FLAT WASHER 1/2"
217	P9859217	LOCK HANDLE
218	PW02	FLAT WASHER 3/8"
219	PSB47M	CAP SCREW M10-1.5 X 40
220	P9859220	FENCE ADJUSTMENT ROD
221	P9859221	KNOB
301	P9860301	BED
302	P9860302	BED PIVOT ROD
303	PSS16M	SET SCREW M8-1.25 X 10
304	P9860304	NOISE DAMPENER
305	PSB31M	CAP SCREW M8-1.25 X 25
306	P9860306	PLATE
307	PSB26M	CAP SCREW M6-1.0 X 12
308	P9860308	SPRING
309	P9860309	TURNBUCKLE
310	P9859308	BED PIVOT PIN (SHORT)
311	PSB70M	CAP SCREW M12-1.75 X 30
401	P9860401	CUTTERHEAD GUARD
402	PSB06M	CAP SCREW M6-1.0 X 25
403	P9859403	SPRING SHAFT HOUSING
404	P9859404	SPRING SHAFT
405	PSB70M	CAP SCREW M12-1.75 X 30
501	P9859501	LIFT ROD COLLAR
502	P9859502	HANDWHEEL
503	P9859503	GEAR
504	P9859504	COLLAR
505	P9859505	LIFT ROD
506	P9859506	GEAR

Ref#	Part#	Description
507	P9859507	LIFT ROD
508	P9859508	SPECIAL RETAINER RING
509	P9859509	SPECIAL RETAINER RING
510	P9859510	SPECIAL WASHER
511	P9859511	LOCK KNOB
512	P9859512	HANDWHEEL KNOB
513	PSB47M	CAP SCREW M10-1.5 X 40
514	PN03M	HEX NUT M8-1.25
515	PSS04M	SET SCREW M6-1.0 X 12
516	P9859516	LUBE FITTING 3⁄16"
517	PK20M	KEY 5 X 5 X 15
518	PLW01	LOCK WASHER 5⁄16"
519	PB07M	HEX BOLT M8-1.25 X 25
520	PB58	HEX BOLT 3⁄8"-16 X 2"
521	PN08	HEX NUT 3⁄8"-16
522	P9859522	SPECIAL NUT
523	PSS02M	SET SCREW M6-1.0 X 6
601	P9859601	ROD

Ref#	Part#	Description
602	P9859602	COLLAR
603	P9859603	HANDLE
604	P9859604	BRAKE CASING
605	P9859605	PIN
606	PSS02M	SET SCREW M6-1.0 X 6
607	P9859607	SPRING
701	P9859701	MOTOR 3 H.P.
702	P9859702	PULLEY
703	PK54M	KEY 7 X 7 X 45
704	PSS08M	SET SCREW 5⁄16"-18 X 1⁄2"
705	PN02M	HEX NUT M10-1.5
706	PLW04	LOCK WASHER 3⁄8"
707	PB14M	HEX BOLT M10-1.5 X 35
708	PW01	FLAT WASHER 1⁄2"
709	PB25M	HEX BOLT M12-1.75 X 25
710	P9859710	MOTOR MOUNT PLATE
711	PVA47	V-BELT (A-47")
712	P9859712	Z SERIES LABEL
713	P9859713	SAFETY GLASSES WARNING
714	P9860714	MACHINE ID WARNING
715	P9859715	PUSH BLOCK WARNING
716	P9859716	CAST LOGO
801	P9860ZX801	COUNTERSUNK CAP SCREW
802	H2334	CARBIDE INDEXABLE CUTTER
803	P9860ZX803	SPIRAL CUTTERHEAD BODY

MACHINE DATA SHEET

Customer Service #: (570) 546-9663 • To Order Call: (800) 523-4777 • Fax #: (800) 438-5901

14" JOINTER MODEL G9861

Design Type .....Floor Model

Overall Dimensions:
- Table Size .....79¾" x 14¼"
- Height (from Floor to Table) .....30¼"
- Overall Length .....80"
- Overall Width .....36"
- Fence .....4¾" x 39⅜"
- Shipping Weight .....1210 lbs.

Capacities:
- Maximum Depth of Cut .....5/16"
- Maximum Width of Cut .....14"
- Cutterhead Speed .....5900 R.P.M.
- Cuts Per Minute 17,700
- Bevel Jointing .....90° - 45°
- Cutterhead Diameter .....4"
- Knife Size .....14" x 1⅛" x ⅛"
- Dust Hood Size .....4"

Construction:
- Table .....Precision Ground Cast Iron
- Fence Assembly .....Precision Ground Cast Iron
- Body Assembly .....Cast Iron
- Base .....Cast Iron
- Cutterhead .....3 Knife Slots w/ Shielded Ball Bearings and Grease Fittings
- Guard .....Cast Aluminum

Motor:
- Type .....TEFC Capacitor Start Induction
- Horsepower .....3 H.P.
- Phase/Voltage/Amps Single/220V/15A
- Cycle/R.P.M. .....60 Hertz/3500 R.P.M.
- Switch .....Magnetic W/ Thermal Overload Protector
- Power Transfer .....Twin V-Belt
- Bearings .....Sealed & Permanently Lubricated

Features:
- Fence .....Center Mounted, Positive Stops at 45° and 90°
- Table Movement .....Independently Adjustable, Handwheel Precision
- Infeed & Outfeed Tables .....Heat Treated
- .....Pedestal Mounted ON/OFF Switch
- .....Noise Dampening System

Specifications, while deemed accurate, are not guaranteed.

G9861 14" JOINTER

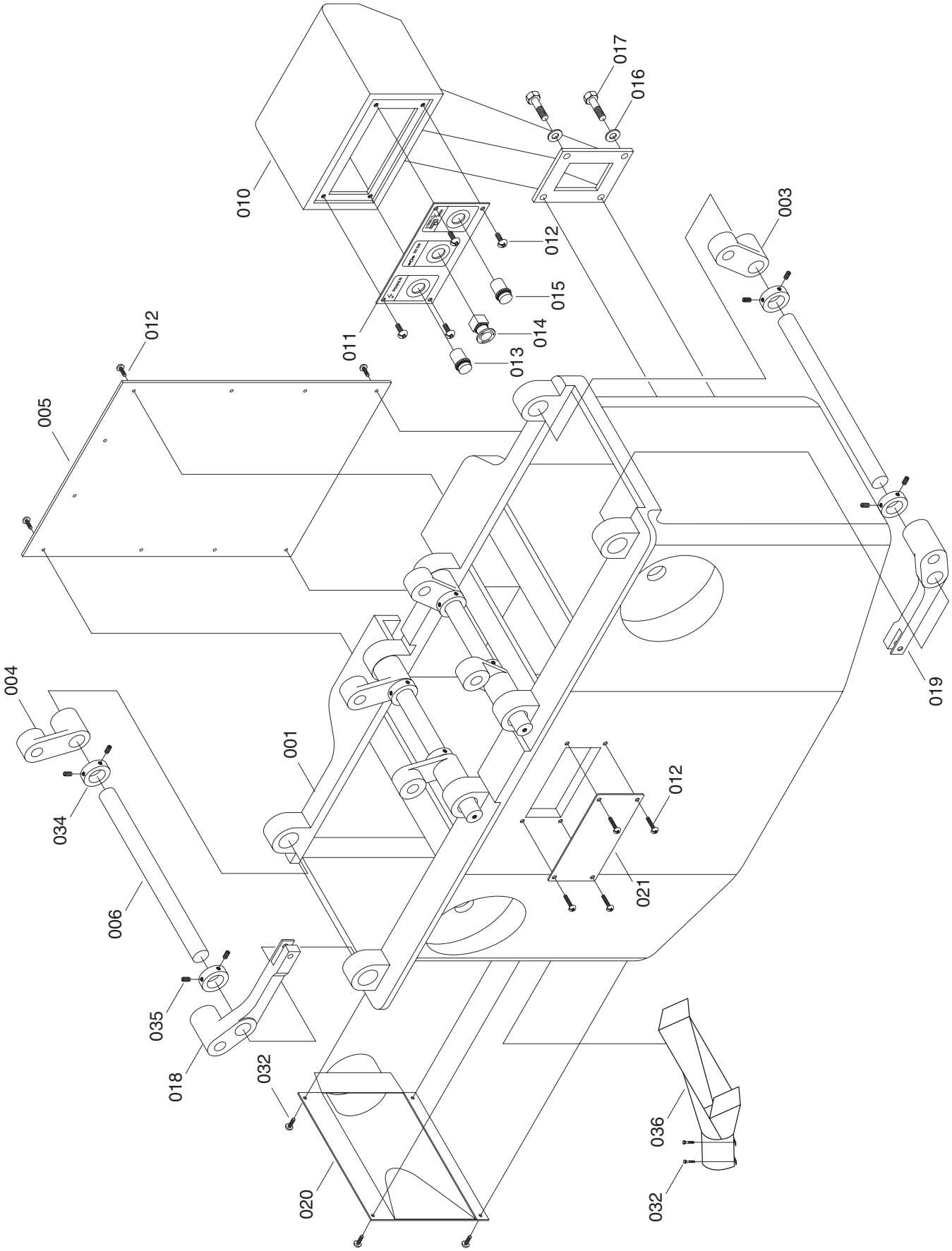

G9861 14" JOINTER

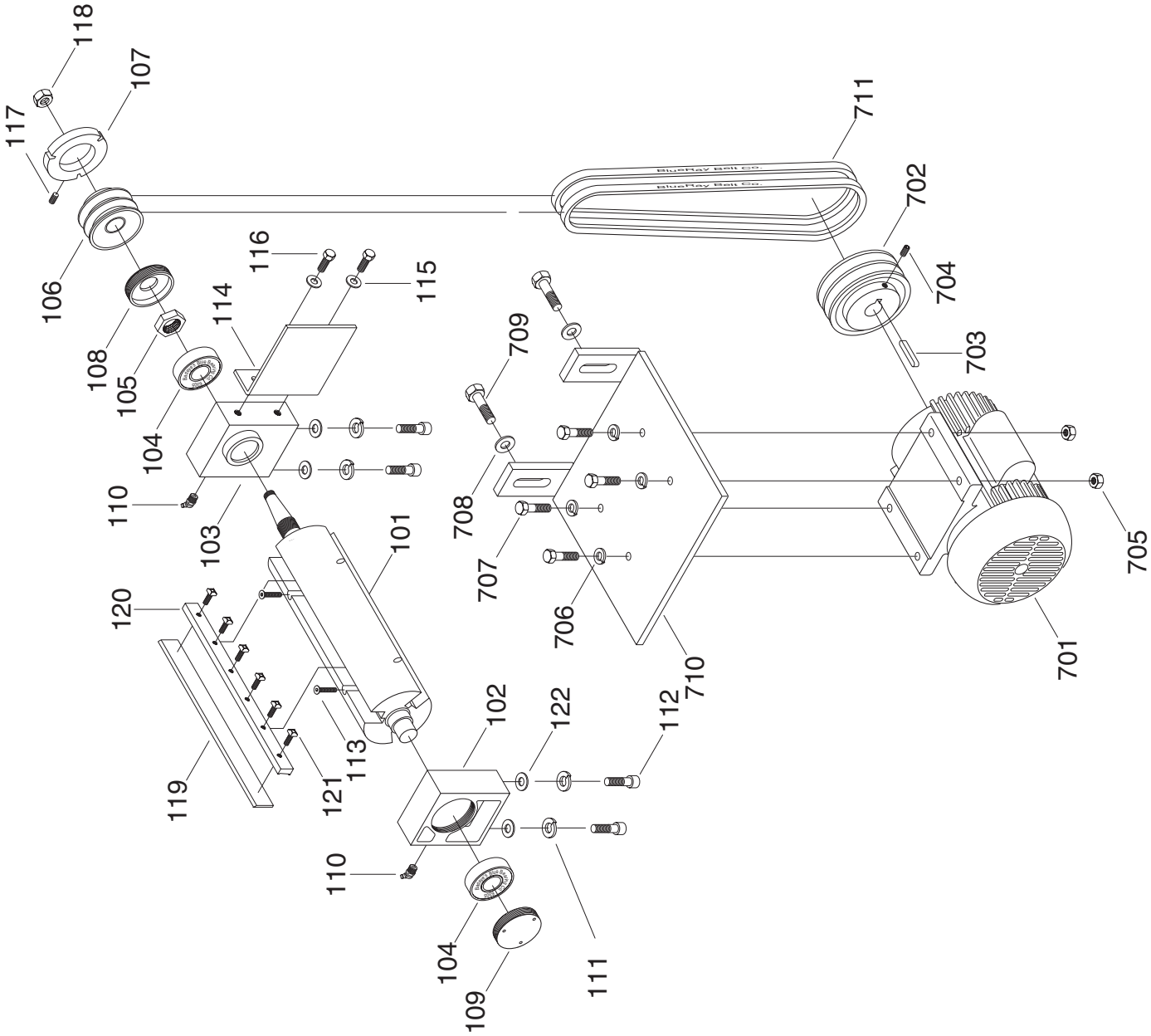

G9861 14" JOINTER

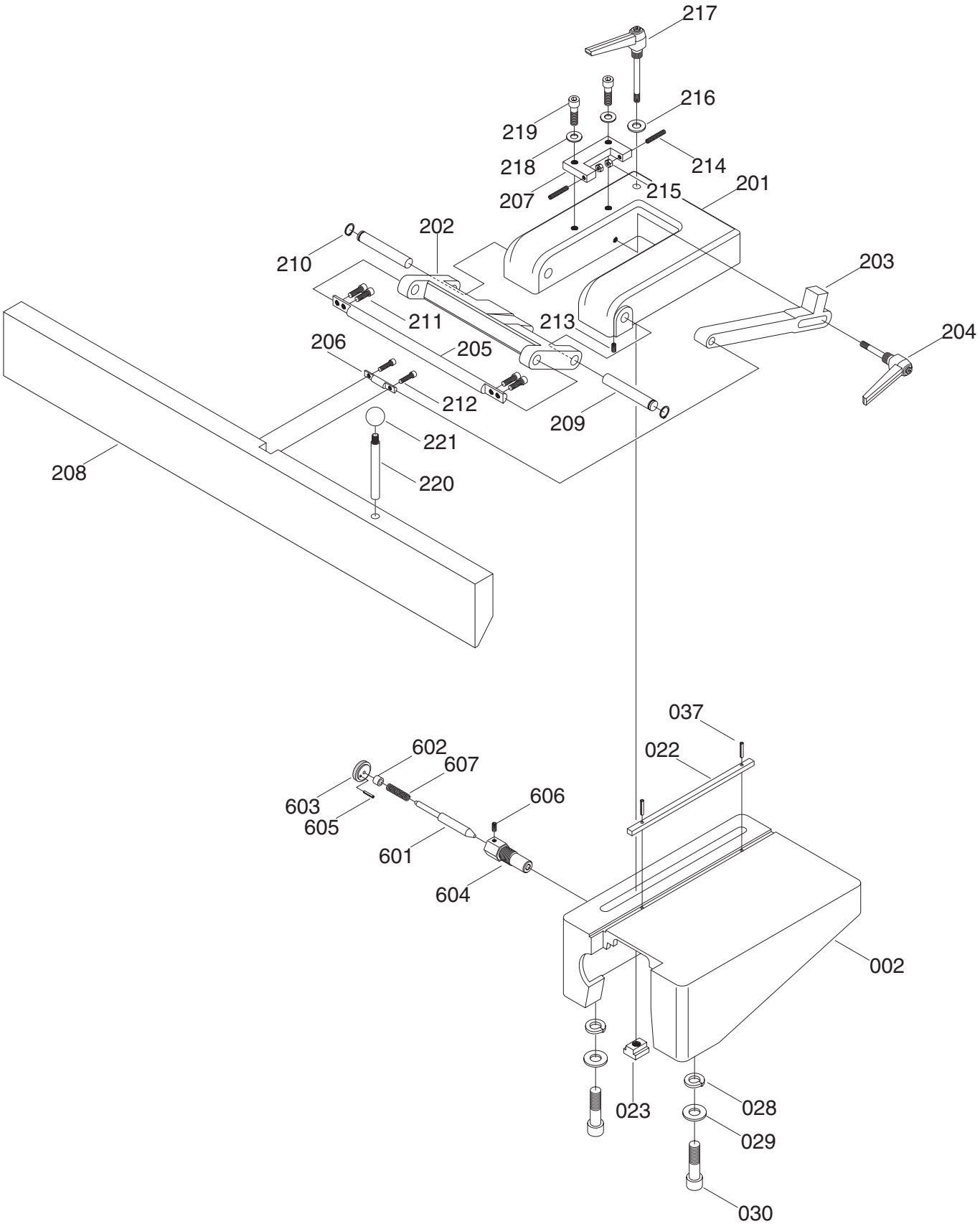

G9861 14" JOINTER

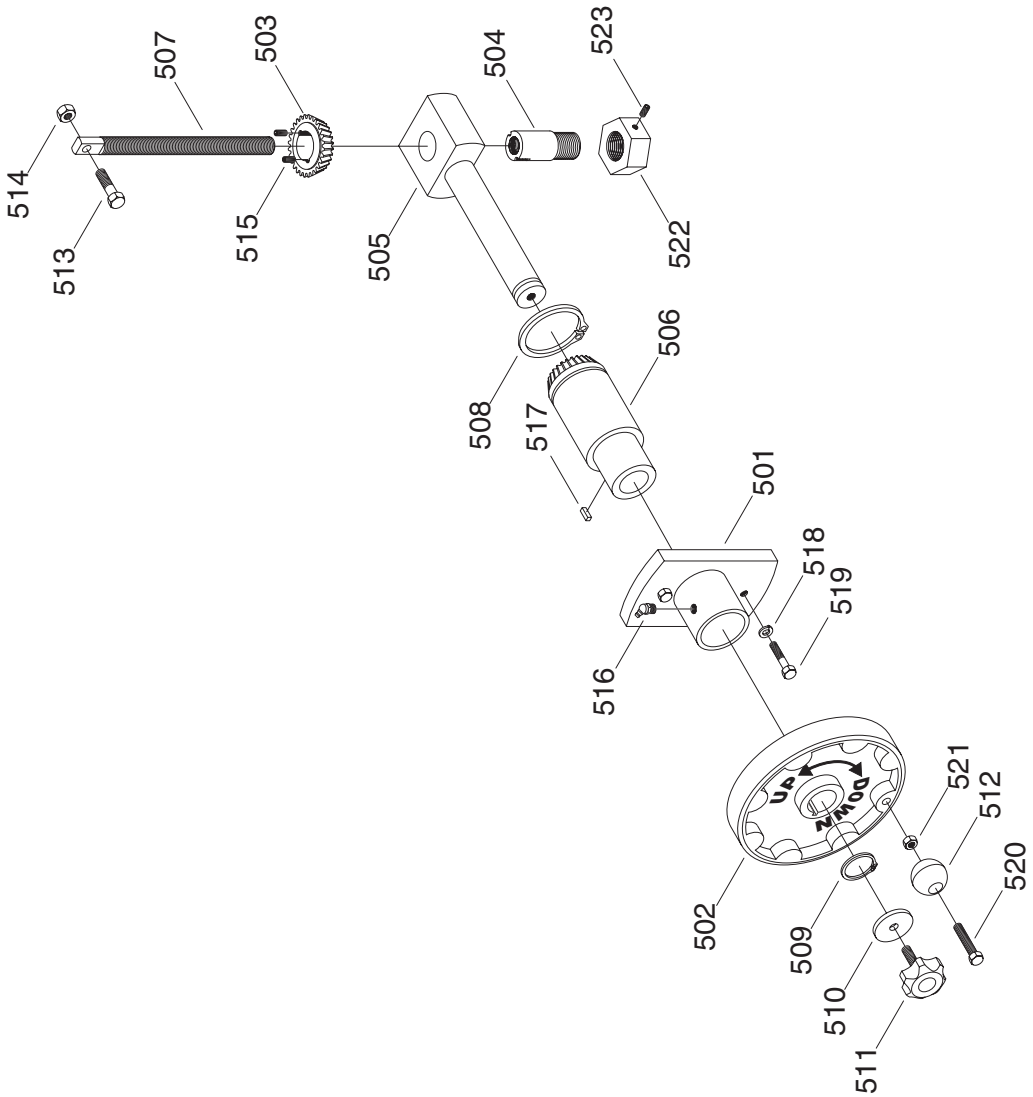

G9861 14" JOINTER

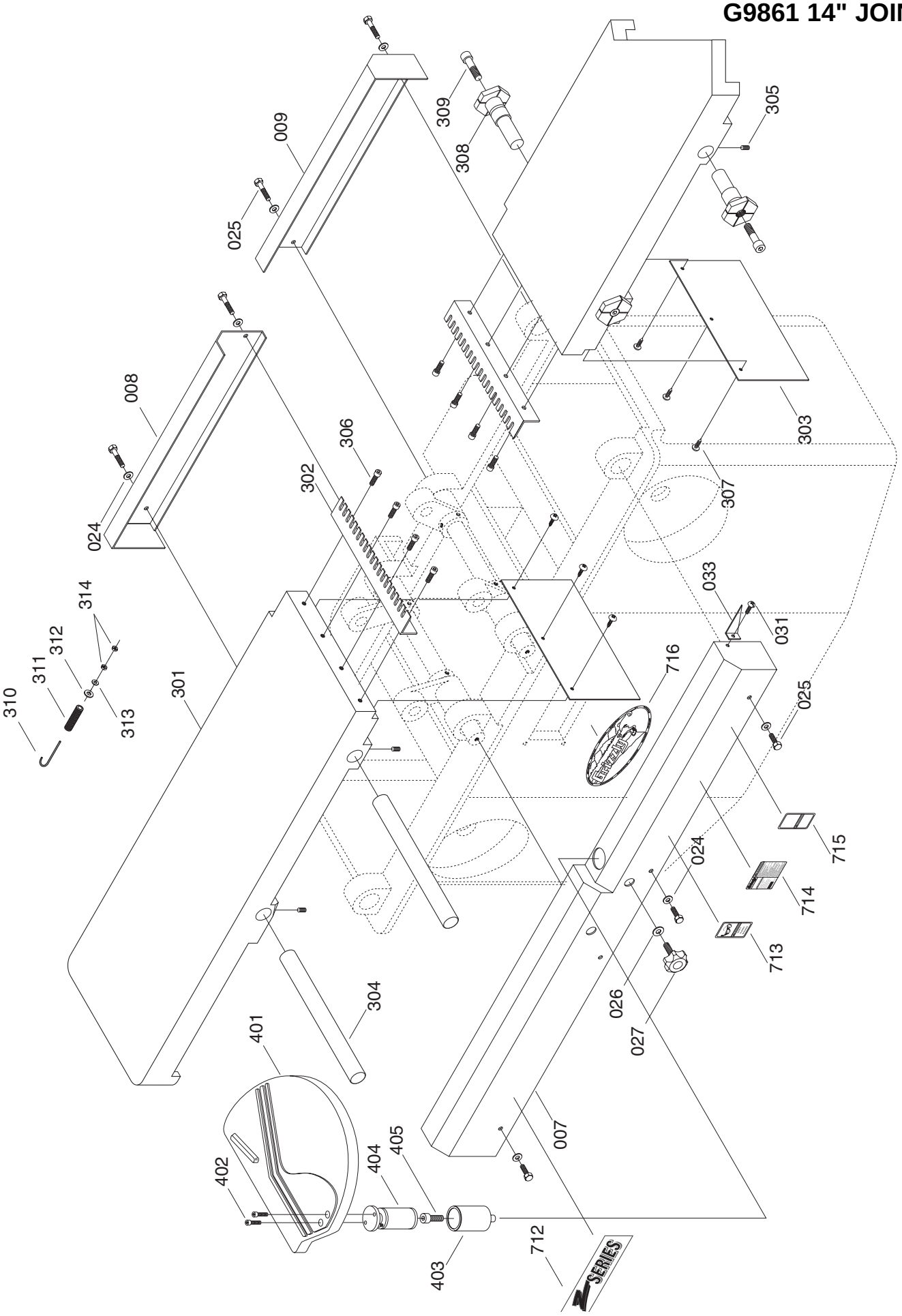

Ref#	Part#	Description
001	P9861001	BASE
002	P9861002	FENCE SEAT
003	P9859003	TABLE SUPPORT
004	P9859005	TABLE SUPPORT
005	P9859011	BASE COVER
006	P9861006	TABLE SPINDLE
007	P9859006	FRONT HOUSING
008	P9859008	LEFT REAR HOUSING
009	P9859007	RIGHT REAR HOUSING
010	P9859012	SWITCH BOX
011	P9859013	SWITCH COVER PLATE
012	PS39M	PHLP HD SCR M8-1.25 X 10
013	P9859016	SWITCH (WHITE)
014	P9859015	SWITCH (RED)
015	P9859014	SWITCH (GREEN)
016	PW01	FLAT WASHER ½"
017	PB12M	HEX BOLT M12-1.75 X 55
018	P9859010	TABLE LIFTING ARM
019	P9859004	TABLE LIFTING ARM
020	P9861020	DUST HOOD
021	P9859031	FRONT COVER PLATE
022	PK55M	KEY 10 X 8 X 300
023	P9859019	SLIDE NUT
024	PW07	FLAT WASHER 5⁄16"
025	PB07M	HEX BOLT M8-1.25 X 25
026	PW02	FLAT WASHER ⅜"
027	P9859029	LOCK KNOB
028	PLW06	LOCK WASHER ⅝"
029	PW08M	FLAT WASHER M16
030	PB72M	HEX BOLT M16-1.75 X 30
031	PS42M	PHLP HD SCR M6-1.0 X 10
032	PB02M	HEX BOLT M6-1.0 X 12
033	P9861033	INDEX
034	P9859033	STOP COLLAR
035	PSS20M	SET SCREW M8-1.0 X 8
036	P9861036	DUST CHUTE
037	P9861037	PIN
101	P9861101	CUTTERHEAD
102	P9859102	HOUSING HEAD AXLE BOX (R.H.)
103	P9859103	HOUSING
104	P9859104	BEARING 6305-VV
105	P9859105	CIRCULAR NUT
106	P9859106	CUTTERHEAD BELT WHEEL
107	P9859107	CUTTERHEAD STOP PLATE
108	P9859108	CUTTERHEAD COVER (SMALL)
109	P9859109	CUTTERHEAD COVER (SMALL)
110	P9859110	OIL FEEDER 1⁄16"
111	PLW06M	LOCK WASHER M10
112	PB14M	HEX BOLT M10-1.5 X 35
113	PS11M	PHLP HD SCR M6-1.0 X 16

Ref#	Part#	Description
114	P9859119	CASE PLATE
115	PW04M	FLAT WASHER M10
116	PB65	HEX BOLT ⅜"-16 X ⅝"
117	PSS09M	SET SCREW M8-1.25 X 20
118	P9859118	SPECIAL HEX NUT
119	P9861119	CUTTER
120	P9861120	GIB
121	P9859121	CUTTER KNOB
122	PW04M	FLAT WASHER M10
201	P9860201	FENCE SEAT
202	P9859202	ANGLE FENCE SEAT
203	P9860203	ANGLE SEAT FASTEN ROD
204	P9859204	KNOB
205	P9859205	FENCE ROD (LONG)
206	P9859206	FENCE ROD (SHORT)
207	P9859207	ANGLE PLATE
208	P9859208	FENCE
209	P9859209	FENCE ROD
210	P9859210	SPECIAL RETAINER RING
211	PSB13M	CAP SCREW M8-1.25 X 30
212	PSB06M	CAP SCREW M6-1.0 X 25
213	PSS04M	SET SCREW M6-1.0 X 12
214	PSS29M	SET SCREW M6-1.0 X 35
215	PN01M	HEX NUT M6-1.0
216	PW01	FLAT WASHER ½"
217	P9859217	KNOB
218	PW02	FLAT WASHER ⅜"
219	PSB47M	CAP SCREW M10-1.5 X 40
220	P9859220	FENCE ADJUSTMENT ROD
221	P9859221	KNOB
301	P9861301	BED
302	P9861302	NOISE DAMPENER
303	P9861303	PLATE
304	P9861304	TABLE SPINDLE
305	PSS16M	SET SCREW M8-1.25 X 10
306	PSB31M	CAP SCREW M8-1.25 X 25
307	PSB26M	CAP SCREW M6-1.0 X 12
308	P9859308	BED PIVOT PIN
309	PSB70M	CAP SCREW M12-1.75 X 30
310	P9861310	HOOK ROD
311	P9861311	SPRING
312	PW01	FLAT WASHER ½"
313	PW02	FLAT WASHER ⅜"
314	PN08	HEX NUT ⅜"-16
401	P9861401	CUTTERHEAD GUARD
402	PSB06M	CAP SCREW M6-1.0 X 25
403	P9859403	SPRING SHAFT HOUSING
404	P9859404	SPRING SHAFT
501	P9861501	LIFT ROD COLLAR
502	P9859502	HANDWHEEL

Ref#	Part#	Description
503	P9859503	GEAR
504	P9859504	COLLAR
505	P9859505	LIFT ROD
506	P9859506	GEAR
507	P9859507	LIFT ROD
508	P9859508	SPECIAL RETAINER RING
509	P9859509	SPECIAL RETAINER RING
510	P9859510	SPECIAL WASHER
511	P9859511	LOCK KNOB
512	P9859512	HANDWHEEL KNOB
513	PB32M	HEX BOLT M10-1.5 X 25
514	PN02M	HEX NUT M10-1.5
515	PSS04M	SET SCREW M6-1.0 X 12
516	P9859516	LUBE FITTING 3⁄16"
517	PK20M	KEY 5 X 5 X 15
518	PLW01	LOCK WASHER 5⁄16"
519	PB07M	HEX BOLT M8-1.25 X 25
520	PB58	HEX BOLT 3⁄8"-16 X 2"
521	PN08	HEX NUT 3⁄8"-16
522	P9859522	SPECIAL NUT
523	PSS02M	SET SCREW M6-1.0 X 6
601	P9859601	ROD

Ref#	Part#	Description
602	P9859602	COLLAR
603	P9859603	HANDLE
604	P9859604	BRAKE CASING
605	P9859605	PIN
606	PSS02M	SET SCREW M6-1.0 X 6
607	P9859607	SPRING
701	P9859701	MOTOR 3 H.P.
702	P9859702	PULLEY
703	PK54M	KEY 7 X 7 X 45
704	PSS08	SET SCREW 5⁄16"-18 X ½"
705	PN02M	HEX NUT M10-1.5
706	PLW04	LOCK WASHER 3⁄8"-16
707	PB14M	HEX BOLT M10-1.5 X 35
708	PW01	FLAT WASHER ½"
709	PB25M	HEX BOLT M12-1.75 X 25
710	P9859710	MOTOR MOUNT PLATE
711	PVA47	V-BELT (A-47")
712	P9859712	Z SERIES LABEL
713	P9859713	SAFETY GLASSES WARNING
714	P9861714	MACHINE ID WARNING
715	P9859715	PUSH BLOCK WARNING
716	P9859716	CAST LOGO

NOTES

WARRANTY AND RETURNS

Grizzly Industrial, Inc. warrants every product it sells for a period of **1 year** to the original purchaser from the date of purchase. This warranty does not apply to defects due directly or indirectly to misuse, abuse, negligence, accidents, repairs or alterations or lack of maintenance. This is Grizzly's sole written warranty and any and all warranties that may be implied by law, including any merchantability or fitness, for any particular purpose, are hereby limited to the duration of this written warranty. We do not warrant or represent that the merchandise complies with the provisions of any law or acts unless the manufacturer so warrants. In no event shall Grizzly's liability under this warranty exceed the purchase price paid for the product and any legal actions brought against Grizzly shall be tried in the State of Washington, County of Whatcom.

We shall in no event be liable for death, injuries to persons or property or for incidental, contingent, special, or consequential damages arising from the use of our products.

To take advantage of this warranty, contact us by mail or phone and give us all the details. We will then issue you a "Return Number," which must be clearly posted on the outside as well as the inside of the carton. We will not accept any item back without this number. Proof of purchase must accompany the merchandise.

The manufacturers reserve the right to change specifications at any time because they constantly strive to achieve better quality equipment. We make every effort to ensure that our products meet high quality and durability standards and we hope you never need to use this warranty.

Please feel free to write or call us if you have any questions about the machine or the manual.

Thank you again for your business and continued support. We hope to serve you again soon.

WARRANTY CARD

Name _____

Street _____

City _____State_____Zip_____

Phone Number_____E-Mail_____FAX_____

MODEL #_____ Serial #_____

The following information is given on a voluntary basis. It will be used for marketing purposes to help us develop better products and services. Of course, all information is strictly confidential.

1. How did you learn about us?

___Advertisement
___Catalog
___World Wide Web
___Friend
___Card Deck

___Other_____

2. Which of the following magazines do you subscribe to.

___American Woodworker
___Cabinetmaker
___Family Handyman
___Fine Homebuilding
___Fine Woodworking
___Home Handyman
___Journal of Light Construction
___Old House Journal
___Popular Mechanics
___Popular Science
___Popular Woodworking
___Practical Homeowner
___Shop Notes
___Today's Homeowner
___WOOD
___Wooden Boat
___Woodshop News
___Woodsmith
___Woodwork
___Woodworker
___Woodworker's Journal
___Workbench

___Other_____

3. Which of the following woodworking/remodeling shows do you watch?

___Backyard America
___Home Time
___The American Woodworker
___The New Yankee Workshop
___This Old House
___Woodwright's Shop

___Other_____

4. What is your annual household income?

___$20,000-$29,999
___$30,000-$39,999
___$40,000-$49,999
___$50,000-$59,999
___$60,000-$69,999
___$70,000-$79,999
___$80,000-$89,999
___$90,000 +

5. What is your age group?

___20-29
___30-39
___40-49
___50-59
___60-69
___70 +

6. How long have you been a woodworker?

___0 - 2 Years
___2 - 8 Years
___8 - 20 Years
___20+ Years

7. How would you rank your woodworking skills?

___Simple
___Intermediate
___Advanced
___Master Craftsman

8. What stationary woodworking tools do you own? Check all that apply.

___Air Compressor
___Band Saw
___Drill Press
___Drum Sander
___Dust Collector
___Horizontal Boring Machine
___Jointer
___Lathe
___Mortiser
___Panel Saw
___Planer
___Power Feeder
___Radial Arm Saw
___Shaper
___Spindle Sander
___Table Saw
___Vacuum Veneer Press
___Wide Belt Sander

___Other_____

9. How many of your woodworking machines are Grizzly? _____

10. Which benchtop tools do you own? Check all that apply.

___1" x 42" Belt Sander
___5" - 8" Drill Press
___8" Table Saw
___8" - 10" Bandsaw
___Disc/Belt Sander
___Mini Jointer
___6" - 8" Grinder
___Mini Lathe
___10" - 12" Thickness Planer
___Scroll Saw
___Spindle/Belt Sander

___Other_____

11. How many of the machines checked above are Grizzly? _____

12. Which portable/hand held power tools do you own? Check all that apply.

___Belt Sander
___Biscuit Joiner
___Circular Saw
___Detail Sander
___Drill/Driver
___Miter Saw
___Orbital Sander
___Palm Sander
___Portable Planer
___Saber Saw
___Reciprocating Saw
___Router

___Other_____

13. What machines/supplies would you like Grizzly Industrial to carry?

_____

_____

14. What new accessories would you like Grizzly Industrial to carry?

_____

_____

15. What other companies do you purchase your tools and supplies from?

_____

_____

16. Do you think your purchase represents good value?

___Yes ___No

17. Would you recommend Grizzly Industrial to a friend?

___Yes ___No

18. Would you allow us to use your name as a reference for Grizzly customers in your area? **Note: We never use names more than three times.**

___Yes ___No

19. Comments:_____

_____

_____

_____

_____

CUT ALONG DOTTED LINE

FOLD ALONG DOTTED LINE

Place
Stamp
Here

GRIZZLY INDUSTRIAL, INC.
P.O. BOX 2069
BELLINGHAM, WA 98227-2069

FOLD ALONG DOTTED LINE

Send a Grizzly Catalog to a friend:

Name_____

Street_____

City_____State_____Zip_____

TAPE ALONG EDGES--PLEASE DO NOT STAPLE